PRODUCT SHEET

Carlon® High-Heat Adjust-A-Box®

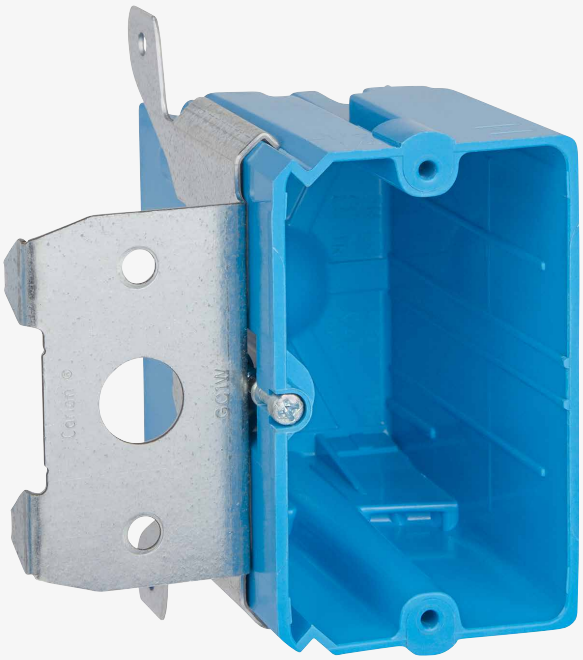

New High-Heat box UL® Listed for 2-hour fire wall

Comes with flexibility of the Adjust-A-Box® line

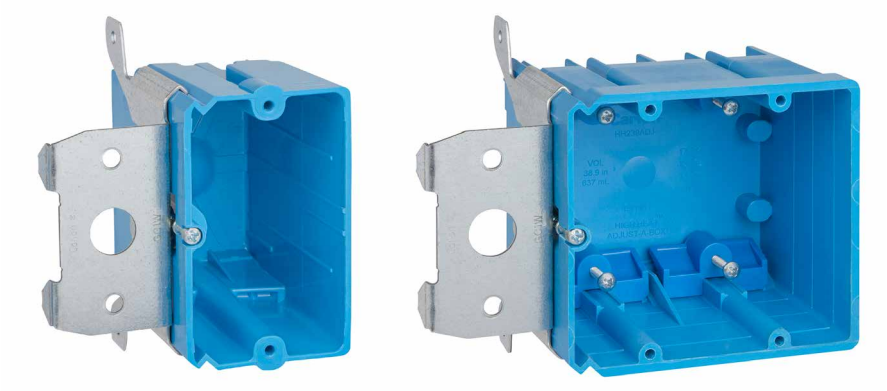

New fire rating! Carlon® High-Heat BLUE boxes can be installed in the same stud cavity of a shared two-hour wall. The double gang box may also be installed back-to-back on 6" studs in the same cavity. Ideal for multi-family construction!

Features and Benefits

- Specifically designed for use in fire-rated walls in residential and light commercial construction
- Side-to-side approved for 3" spacing within same stud cavity on 2x4 studs
- HH239ADJ approved for back-to-back installation with no minimum spacing on 2x6 studs
- Ability to adjust box once installed behind drywall to accommodate varying depths — adjustable up to 1¾"
- Adjustability makes this new product perfect for fire walls with double drywall installed, back splashes, bathroom or kitchen installs
- Removing the box from bracket on the single gang allows to upgrade to a double gang box, ideal for old work applications
- The steel bracket is designed to be used with steel or wood studs

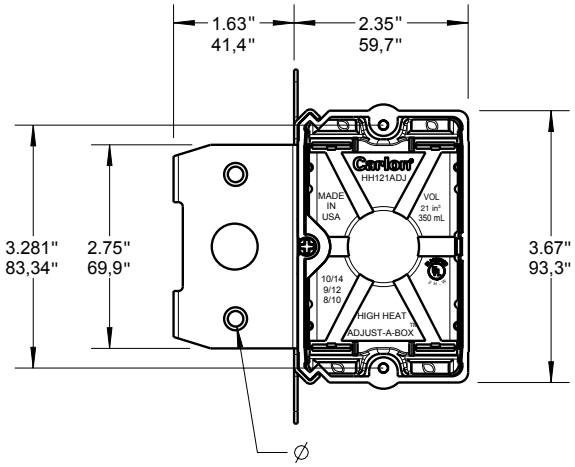

Applications

- **Commercial and institutional construction** — A complete box line with unique labor and energy saving propositions
- **Residential construction** — Innovative new products that comply with the latest energy and building codes
- UL Listed for 2-hour fire resistive walls. File R9140, E11461

Catalog number	Size capacity	Size	Description	Mounting	Std. Ctn.
HH121ADJ	21 in³	3.6" H x 2.35" W x 3.59" D	Single gang, adjustable up to 1¾"	Adjustable bracket wood/steel stud	24
HH239ADJ	38 in³	3.75" H x 4.05" W x 2.95" D	Double gang, adjustable up to 1¾"	Adjustable bracket wood/steel stud	16

—

ABB Installation Products Inc.
860 Ridge Lake Blvd
Memphis, TN 38120
USA

abb.com/lowvoltage

© Copyright 2018 ABB. All rights reserved.
Specifications subject to change without notice.

9AKK107046A6181 12.2018