DCM1

Energy meter for DC systems

Description

DCM1 is a direct connection energy Meter for DC systems up to 1000 V dc and current up to 600 A dc. Specifically designed for installation in EV fast chargers, it has two components: a transducer for voltage and current connection and a display unit featuring both Modbus RTU and Modbus TCP communication port. The cable that links the two parts is included and connected to the transducer, making installation easy and fast.

Benefits

- **Fiscal metrology.** State of the art technology, high accuracy and modern architecture allow DCM1 to be the perfect solution for billing purposes, in fact, the product conforms with the most important international standards for fiscal metrology in EV chargers: MID, Eichrecht, LNE, CTEP.
- **Secure and signed data transmission.** DCM1 is conceived to be secure and safe: sealable terminal caps prevent external intervention and tampering, while data authenticity is ensured by the digital signature and the OCMF file.
- **User-friendly interface.**The 128x96 matrix LCD with a backlight display provides excellent visibility and readability of information. The user interface, featuring three mechanical keys, makes page configuration and navigation very intuitive. Additionally, the page filter allows you to hide unnecessary information.
- **Maximum connection flexibility.** The intelligent design of the DCM1 makes it easy to integrate inside the EV charger architecture: the display is detached from the measuring component and both Modbus RTU and Modbus TCP are in the same unit, allowing different connection layouts.
- **Temperature calibrated.** Able to work in an extremely wide temperature range thanks to the temperature drift compensation exploiting a calibration method based on two temperature sensors.
- **Clear and effective diagnostics.** Correct operation is immediately visible through the LEDs and the warning status icons on the display. Diagnostic alerts and real-time temperature values are also available via Modbus to permit constant monitoring.
- **Advantageous and informative display.** DCM1 allows full customisation of many contents displayed, including tariff visualisation, ensuring compliance with A.F.I.R (Alternative Fuels Infrastructure Regulation) requirements. With DCM1 installed, no additional display is needed.

Applications

DCM1 can be installed in any DC switchboard with a rated current up to 600 A to monitor energy consumption or production and the main electrical variables. The main application is within a DC fast charger for electric vehicles, thanks to the 70 °C / 158 °F maximum ambient temperature and allowed maximum current and voltage.

DCM1 is compliant with the German calibration law (Eichrecht), the French requirements for DC EV chargers (LNE), the European MID directive for fiscal metrology and A.F.I.R (Alternative Fuels Infrastructure Regulation) requirements. Furthermore, thanks to its high accuracy and resolution, DCM1 is also suited for EV chargers addressed to the US market, where CTEP and cURus approvals are needed. Both imported and exported energy are certified, making DCM1 the perfect solution also for vehicle to grid applications.

High accuracy (class 1 according to EN IEC 62053- 41) permits the installation also in applications with lower maximum current, considering that DCM1 offers 1% accuracy from 12 to 600 A or 5 to 300 A. Cable loss compensation is able to calculate the losses due to the cable resistance from DCM1 to the connection point to measure only the energy actually provided to the car.

Architecture

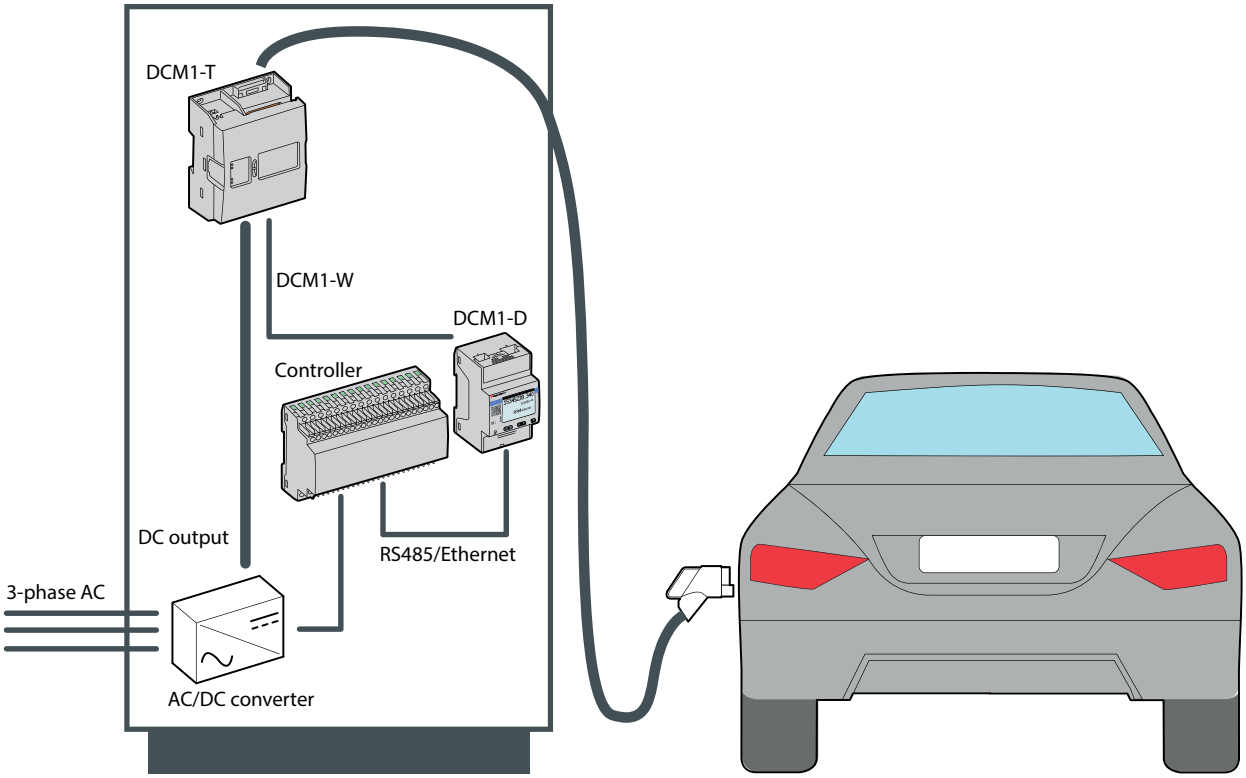

Main functions

- Charging session management and automatic display update (Eichrecht versions)
- Fully customizable contents on the display
- Tariff visualization according to A.F.I.R. requirements (Alternative Fuels Infrastructure Regulation)
- Measure energy and ampere-hour
- Measure power, voltage and current
- Measure the load run hours and the total on-time
- Transmit data to controller or other systems through Modbus RTU or Ethernet port
- Signed data transmission using OCMF file according to the S.A.F.E standard and Transparency software (Eichrecht versions)
- Internal temperature monitoring to ensure timely intervention in case of overheating
- Cable loss compensation

Main features

- Real time variables (V, A, W)
- Quick setup wizard
- 3 mechanical push buttons
- Data refresh time: ≤ 200 ms both in Modbus RTU and Ethernet port
- Continuous sampling of voltage and current
- MID and LNE certified
- Eichrecht and CTEP compliant
- cURus approved (UL 61010)
- Class 1 accuracy according to EN IEC 62053-41
- 128x96 Matrix LCD display with backlight
- 0.0001 kWh resolution via Modbus communication

UCS software

- Free download from Carlo Gavazzi's website
- Configuration through RS485 from PC or trough UWP3.0/UWP4.0 via LAN or the web (UWP Secure Bridge function)
- Setups can be saved offline for serial programming with a single command
- Real time data view for testing and diagnostics

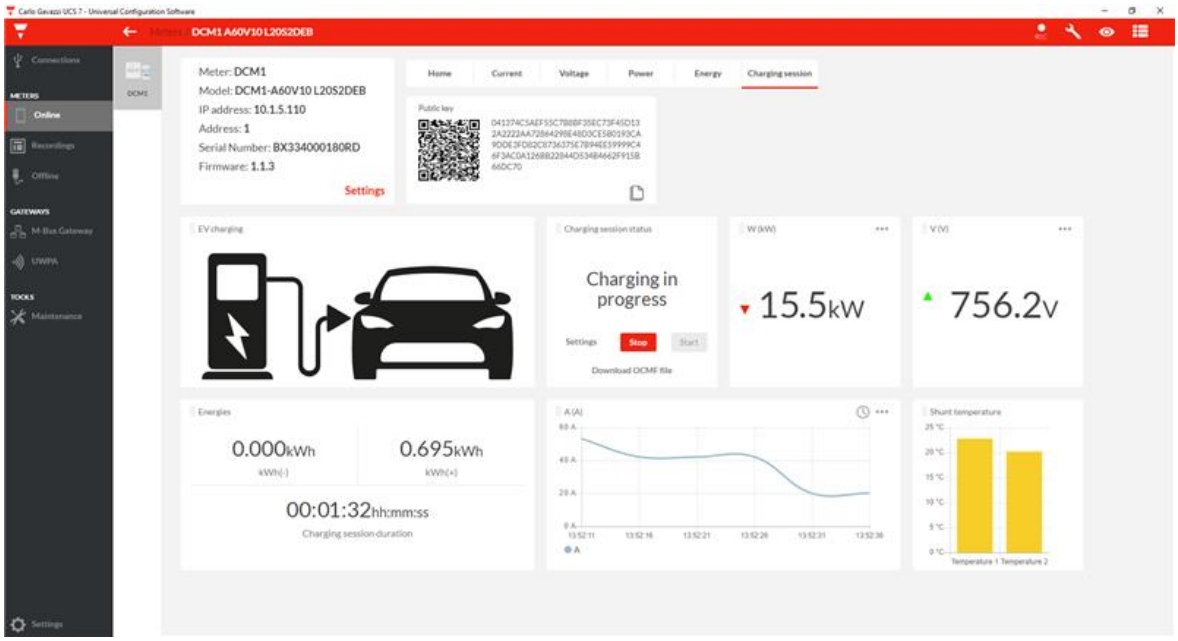

Installation flexibility

DCM1-T is designed to achieve maximum installation flexibility. Here you can see 3 examples:

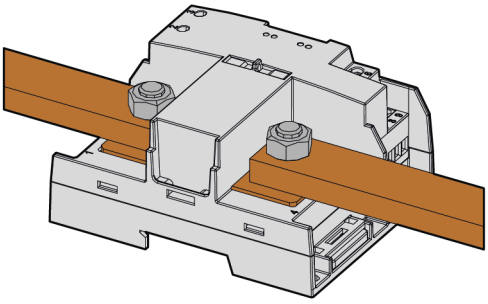

Fig. 1 *Bar-bar mounting*

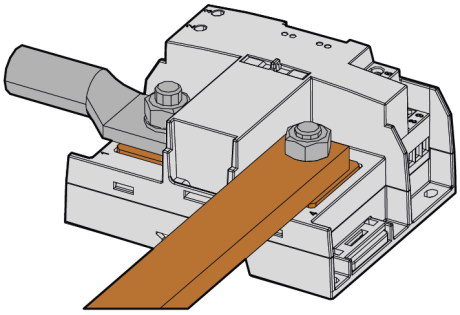

Fig. 2 *Horizontal screw-bar mounting*

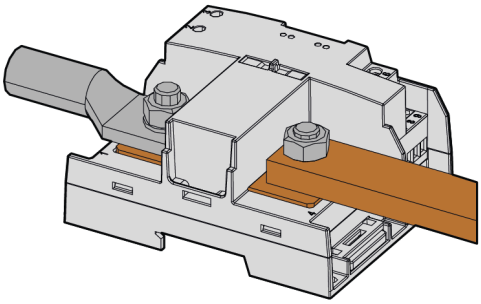

Fig. 3 *Vertical screw-bar mounting*

Structure DCM1-D

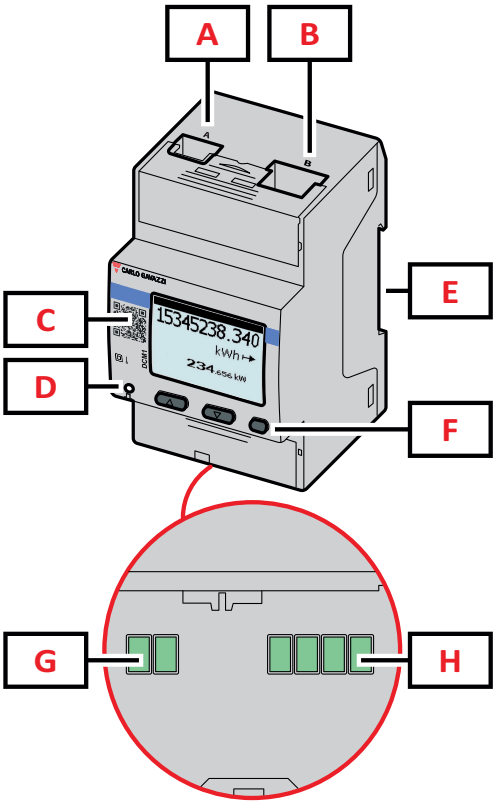

Fig. 4 *DCM1-D Display*

Area	Description
A	DCM1-W cable port
B	Ethernet port
C	Display
D	LED
E	DIN-rail mounting bracket
F	Browsing and configuration buttons
G	Power supply
H	RS485 port

Structure DCM1-T

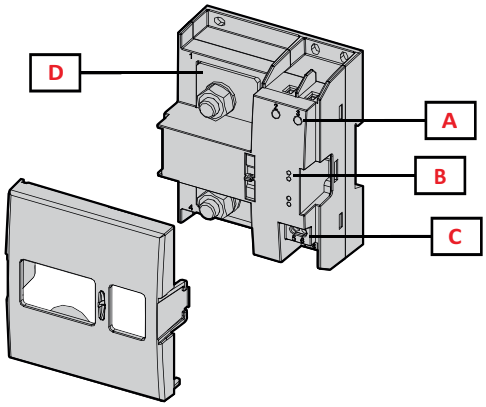

Fig. 5 *DCM1-T front*

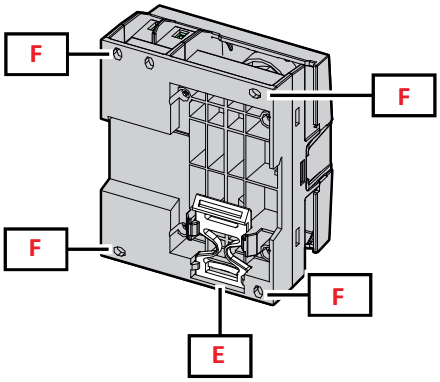

Fig. 6 *DCM1-T back*

Area	Description
A	Voltage inputs
B	LEDs
C	Power supply from DCM1-D
D	Current inputs
E	Bracket for DIN rail mounting (optional)
F	Holes for back panel mounting by screw terminals (mandatory)

Structure DCM1-W

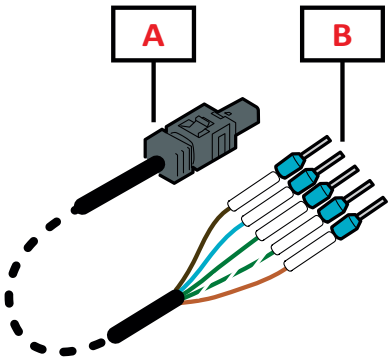

Fig. 7 *DCM1-W Front*

Area	Description
A	Connector for DCM1-D
B	Cable lugs connection for DCM1-T (factory pre-wired)

DCM1 and charging session

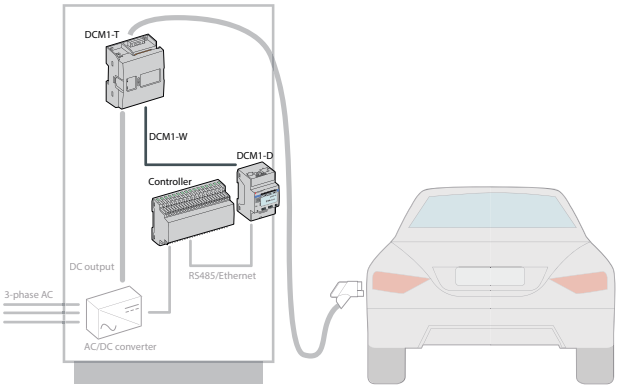

DCM1 connects to the controller via Modbus communication. All relevant information about the charging session is displayed on the screen and recorded in the OCMF file, making DCM1 an ideal solution for installation in EV chargers. The product is compliant with MID, Eichrecht, and A.F.I.R. standards (For more information about charging session see the user manual).

Charging session management

DCM1 features a charging session management function that organizes the charging process into three distinct phases: the start of the charging session, the charging mode, and the end of the charging mode. During this process, users can view:

- Accurate current date and time, thanks to the clock synchronization function implemented in the product;
- Precise measurement of the imported and/or exported energy.
- General information about the transaction and the EV charger, including the start and end of the process, transaction ID, and EV charger ID.
- User-activated/deactivated data, such as system power, actual duration of the charging session, and tariff information.
- Fully customizable content, allowing users to write strings up to 250 characters.

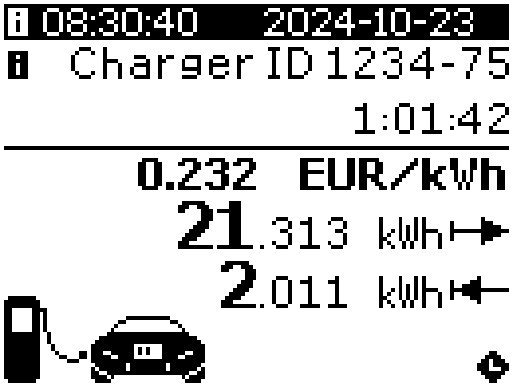

Fig. 8 *example of the screen during the charging mode status, with a long string specifying the charger ID, tariff and duration activated and real time data about date and time, imported and exported energy.*

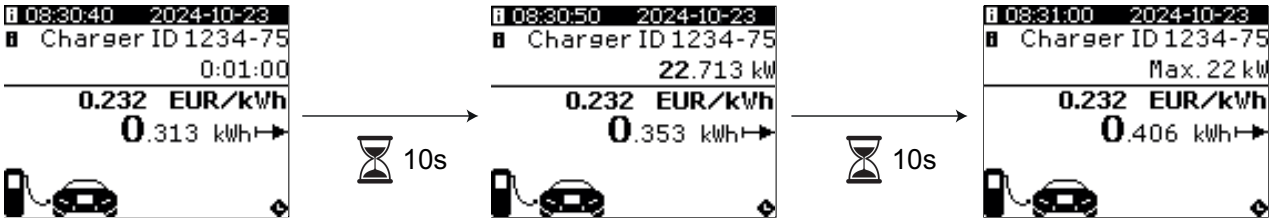

Fig. 9 *Charging session in progress, with TT field, system power, custom string 1 and 2 active. Time trigger is set to 10 seconds.*

OCMF file

The Open Charge Metering Format is an independent and generally usable data format for recording meter readings from charging stations that are relevant under calibration law. In addition, it permits the implementation of the evaluation and signature verification of the format by the Transparency Software. The file, written in JSON format, is compiled and saved on the cloud or local server once the charging session ends.

Further readings

Information	Where to find it
OCMF format	https://github.com/SAFE-eV/OCMF-Open-Charge-Metering-Format/blob/master/OCMF-en.md
Transparency software	https://safe-ev.org/en/transparency-software/e-mobilists/

Features

General

Component	DCM1-T	DCM1-D
Material	PBT	Housing: PBT Transparent cover: polycarbonate
UL flammability class	UL-94 V0	
Protection degree	Front: IP10	Terminal : IP20 Front: IP40
Protective class	II	
Terminals	Current inputs: cable or lug. Max: 50x10 mm; M10 hole; recommended torque: 20 Nm / 4.43 lbin; Voltage input: 0.5 to 2.5 mm^2 / 13 to 20 AWG, max 0.5 Nm / 4.43 lbin	Power supply and RS485 port: 0.5 to 2.5 mm^2 / 13 to 20 AWG, max 0.5 Nm / 4.43 lbin
Overvoltage category	Cat. II	
Measurement category	Cat. II up to 1000 V Cat. III up to 600 V	
Rated impulse voltage	6 kV	
Pollution degree	2	
Mounting	DIN rail and back panel by screw terminals	DIN Rail
Weight	1150 g / 2.53 lb (package included)	

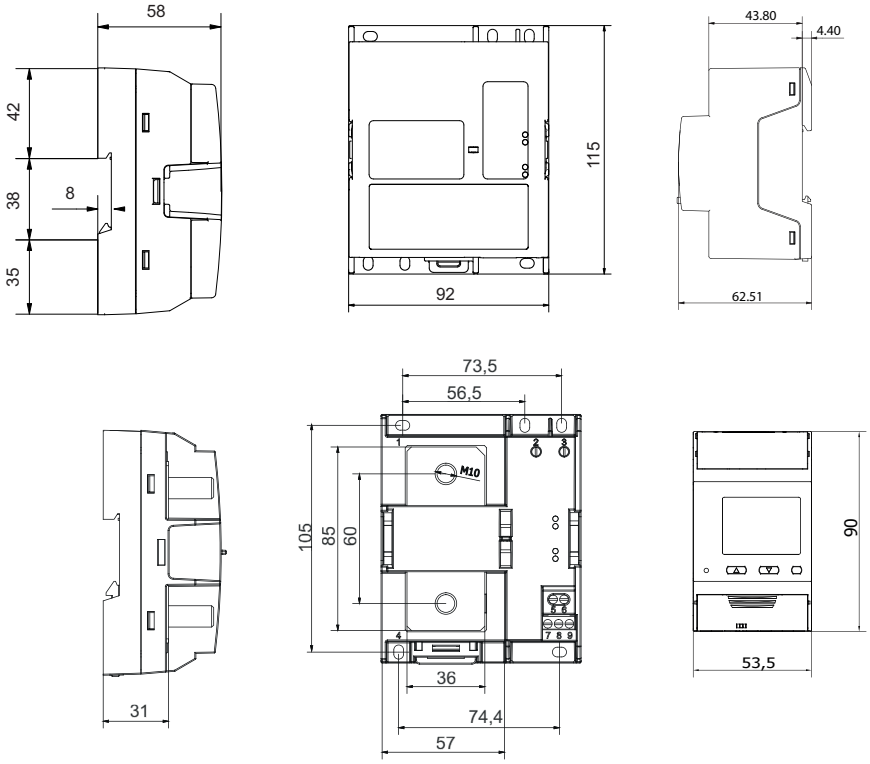

Environmental specifications

Operating temperature*	From -25 to +70 °C / From -13 to +158 °F
Storage temperature	From -40 to +85 °C / From -40 to +185 °F
Max temperature on shunt	DCM1-T: 120 °C / 248 °F
Mechanical environmental condition	M2

***Note**: R.H. < 90 % non-condensing @ 40 °C / 104 °F.*
**Note: All the tests required by CE, cURus, MID, Eichrecht and LNE compliance have been performed in the above stated operating temperature range. In addition, communication functionality and measurement accuracy have been tested without anomalies at temperature down to -40°C / -40 °F.*

Input and output insulation

Type	Measurement inputs	Power supply	RS485 serial port	Ethernet
Measurement inputs	-	Double/Reinforced	Double/Reinforced	Double/Reinforced
Power supply	Double/Reinforced	-	-	-

Type	Measurement inputs	Power supply	RS485 serial port	Ethernet
RS485 serial port	Double/Reinforced	-	-	-
Ethernet	Double/Reinforced	-	-	-

Compatibility and conformity

European directives	2014/32/EU (MID) 2014/35/EU (LVD - Low Voltage) 2014/30/EU (EMC - Electro Magnetic Compatibility) 2011/65/EU, 2015/863/EU (Electric-electronic equipment hazardous substances)
Standards	**EMC - Electro Magnetic Compatibility**: EN IEC 61000-6-3, EN IEC 61000-6-2, EN IEC 62052-11 **Electrical Safety**: EN IEC 61010-1, EN IEC 62052-31 (MID versions) **Metrology**: EN IEC 62053-41, EN50470-4 (MID versions), REA 6A+PTB 50.7 (Eichrecht versions), LNE: Decree n°2001-387 of 3rd, May 2001 modified, order dated 31st, December 2001 and decision No. 22.00.570.001.1 of 1 March 2022 relating to direct current electricity meters (LNE versions). **SW security**: WELMEC 7.2
Approvals	CE c UL us

Electrical specifications

Electrical system	
Managed electrical system	DC

Voltage inputs	
Voltage connection	Direct
Rated voltage (U_n)	From 150 to 1000 V
Voltage tolerance	From 0.8 to 1.15 U_n
Input impedance	3.2 MΩ
Start-up voltage	20 V

Current inputs	300 A	600 A
Current connection	Direct	Direct
Base current (I_b)	50 A	120 A
Minimum current (I_{min})	2.5 A	6 A
Threshold current (I_{tr})	5 A	12 A
Maximum current (I_{max})	300 A	600 A
Start-up current (I_{st})	0.2 A	0.48 A
Input impedance	0.05 mΩ	0.025 mΩ

Power supply

Type	Auxiliary power supply
Consumption	1.3 W
Power supply range (V)	From 12 to 24 V dc ±20%

Measurements

Method	Average
Energy update rate	200 ms

Available measurements

Active energy	Unit	Communication	Display
Imported (+) Total	kWh+	●	●
Imported (+) partial	kWh+	●	-
Exported (-) Total	kWh-	●	●
Exported (-) partial	kWh-	●	-

Ampere-hour	Unit	Communication	Display
Imported (+) Total	Ah+	●	●
Imported (+) partial	Ah+	●	-
Exported (-) Total	Ah-	●	●
Exported (-) partial	Ah-	●	-

Run hour meter	Unit	Communication	Display
Total (kWh+)	hh:mm	●	●
Partial (kWh+)	hh:mm	●	-
Total (kWh-)	hh:mm-	●	●
Partial (kWh-)	hh:mm-	●	-
Total ON time	hh:mm	●	●
Partial ON time	hh:mm	●	-

Electrical variable	Unit
Voltage	V
Current	A
Active power	W

Shunt temperature	Unit
Upstream	°C
Downstream	°C

Charging session measurements (Eichrecht versions)

Active energy	Unit
Imported (+) Total	kWh+
Exported (-) Total	kWh-
Duration	hh:mm:ss

Energy metering

Energy metering depends on the measurement type (according to the selected model).

Easy connection

Easy connection function: irrespective of the current direction, the power always has a plus sign that increases the positive energy meter. The negative energy meter is not available.

Bidirectional

Bidirectional: voltage, current, and power are measured using the proper sign. The positive or the negative energy increases according to the power sign.

Measurement accuracy

Current	
From I_{tr} to I_{max} A	± 0.5% rdg
From I_{min} to I_{tr} A	± 1% rdg

Voltage	
From U_n min -20% to U_n max +15%	± 0.5% rdg

Power	
From I_{tr} to I_{max} A	± 1% rdg
From I_{min} to I_{tr} A	± 1.5% rdg

Energy	
Class	Class 1 according to EN IEC 62053-41 Class B according to EN 50470-4 (MID)

Display

Type	Graphical matrix display
Refresh time	500 ms
Description	128x96 pixel backlit LCD
Variable readout	Instantaneous: 5+1 dgt or 5+3 dgt Energy: 7+3 dgt

Display icons

The table reports the icons that can appear on the display and explains their meaning.

Symbol	Description
	Current overrange, the measured value is still displayed
	Voltage overrange, the measured value is still displayed
	Temperature on the shunt overrange
	Communication: reading or writing command is addressed to DCM1
	Clock synchronized
	Internal failure

Measurement resolution

Variable	Resolution by serial communication	Display resolution
Energy	0.0001 kWh	0.001 kWh
Ampere-hour	0.001 Ah	0.001 Ah
Power	0.001 kW	0.001 kW
Current	0.001 A	0.001 A
Voltage	0.1 V	0.1 V
Run-hour meter	0.01 h	1 m
Shunt temperature	0.1 °C	0.1 °C

LED

	DCM1-T	DCM1-D
Function	Green colour, power on and communication; Amber colour, warning overrange (temperature, current, voltage) or fatal error	Red colour, proportional to energy consumption or energy export, according to the selected Display page (see user manual)
Constant	-	1000 pulse/kWh

Symbols

The table reports the symbols that can appear on the device and in the related documents.

Symbol	Description
	Dangerous voltage
	Danger, live parts
	Caution
	Provides essential information on completing the task that should not be neglected
	Manual symbol
	Safety sign notice
	The product is not to be discarded with normal household waste
	Single phase
	Double insulation

Communication ports

Modbus RTU

Protocol	Modbus RTU
Devices on the same bus	Max 247 (1/8 unit load)
Communication type	Multidrop, bidirectional
Connection type	2 wires
Configuration parameters	Modbus address (1-247) Baud rate (9.6/19.2/38.4/115.2 kbps) Parity (None/ Even)
Refresh time	≤ 200 ms
Configuration mode	Via keypad or UCS software

Ethernet port

Protocol	Modbus TCP/IP
Devices on the same bus	Maximum 5 TCP connections simultaneously
Connection type	RJ45 connector (10 Base-T, 100 Base-TX) maximum distance 100 m
Configuration parameters	IP address Subnet mask Gateway TCP/IP port DHCP enabling
Refresh time	≤ 200 ms
Configuration mode	Via keypad or UCS software

Connection Diagrams

Voltage and current

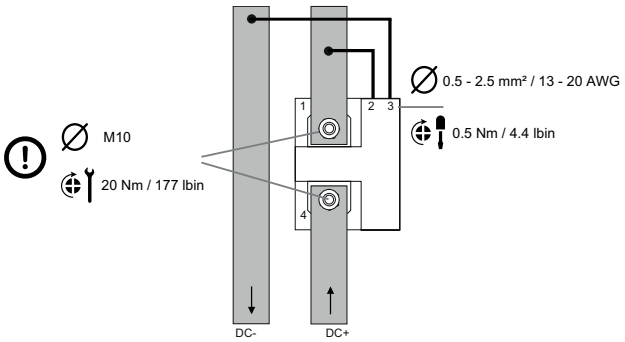

Fig. 10 *Current (option A) and voltage inputs*

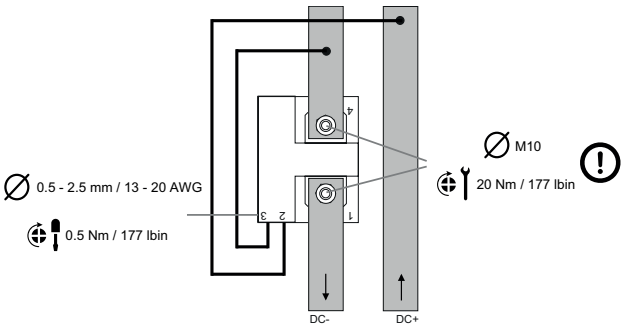

Fig. 11 *Current (option B) and voltage inputs*

Communication and power supply

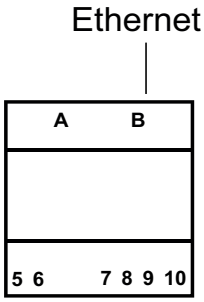

Fig. 12 *Ethernet*

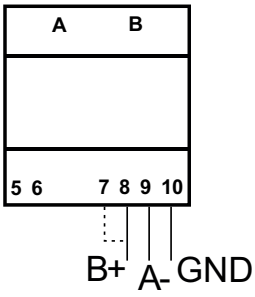

Fig. 13 *RS485 terminalization. Last device on RS485*

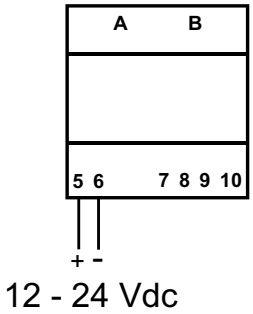

Fig. 14 *Power supply*

References

Order code

DCM1 ☐ V10 L 20 S1 ☐

Enter the code option instead of ☐

Code	Options	Description
DCM1	-	Model
☐	A30	Max current: 300 A
	A60	Max current: 600 A
V10	-	Max voltage: 1000 V
L	-	Power supply: 12-24 V dc
20	-	200 cm cable length
S1	-	Ethernet Modbus TCP + RS485 Modbus RTU (no signature)
☐	ULB	cURus + CTEP compliance (Bidirectional)
	PFA	cURus + CTEP compliance + MID (Easy connection)
	PFB	cURus + CTEP compliance + MID (Bidirectional)

DCM1 ☐ V10 L 20 ☐ ☐

Enter the code option instead of ☐

Code	Options	Description
DCM1	-	Model
☐	A30	Max current: 300 A
	A60	Max current: 600 A
V10	-	Max voltage: 1000 V
L	-	Power supply: 12-24 V dc
20	-	200 cm cable length
☐	S2	Ethernet Modbus TCP + RS485 Modbus RTU (256-bit signature)
	S3	Ethernet Modbus TCP + RS485 Modbus RTU (384-bit signature)
☐	DEB	cURus + CTEP compliance + MID + Eichrecht (Bidirectional)
	DEBF	cURus + CTEP compliance + MID + Eichrecht (Bidirectional) + LNE

CARLO GAVAZZI compatible components

Purpose	Component name/code key	Notes
Configure analyzer via desktop application	UCS software	Available for free download at: www.gavazziautomation.com
Aggregate, store and transmit data to other systems	UWP 3.0, UWP 4.0	See relevant datasheet at: www.gavazziautomation.com

COPYRIGHT ©2026
Content subject to change. Download the PDF: www.gavazziautomation.com