FOR-1755 Rev.1.6

未注公差/General tolerances(mm)														
0 ~ 3	>3 ~ 6	>6 ~ 10	>10 ~ 18	>18 ~ 30	>30 ~ 50	>50 ~ 80	>80 ~ 120	>120 ~ 180	>180 ~ 250	>250 ~ 315	>315 ~ 400	>400 ~ 500	>500	0.1/10
±0.12	±0.18	±0.22	±0.26	±0.31	±0.37	±0.57	±0.80	±0.93	±1.05	±1.15	±1.60	±2.20	±2.50	±2°

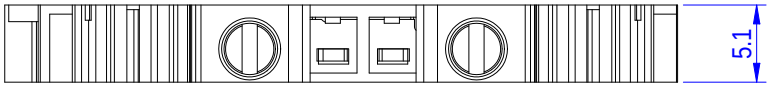

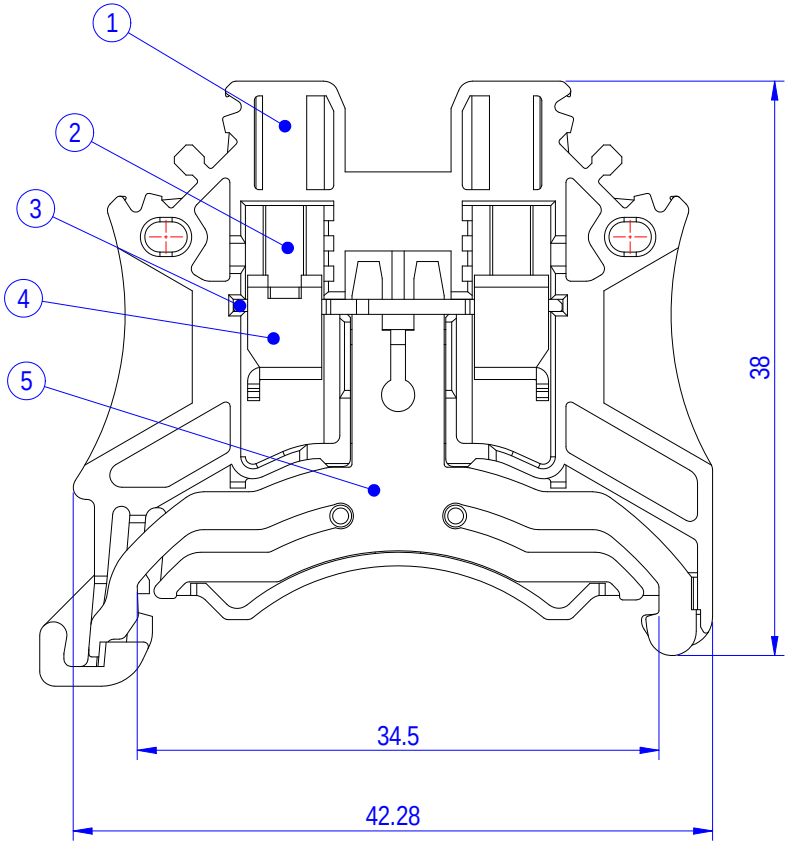

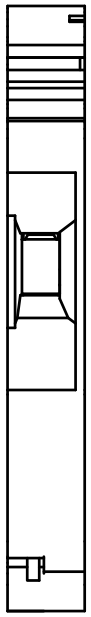

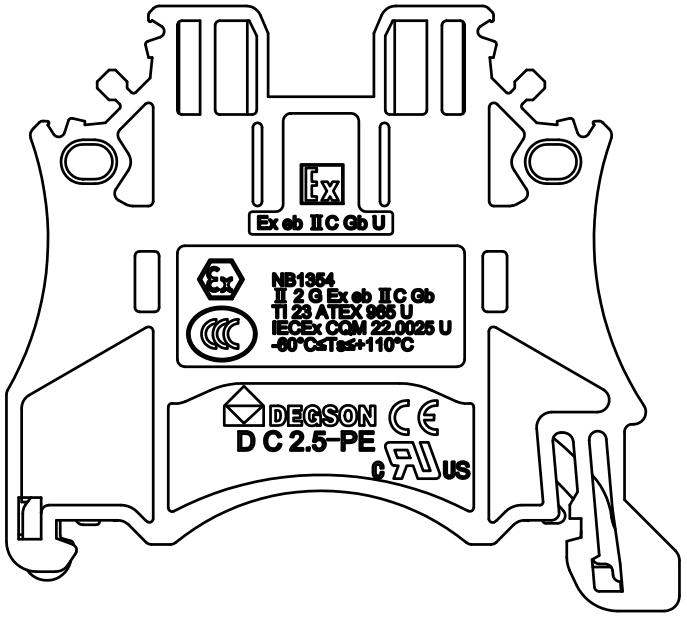

IEC 标准/IEC Standard:			
过压类别/Overvoltage Category/污染等级/Pollution Degree	III/3	III/2	II/2
额定电压/电流/Rated Voltage(V)/Current(A)	/	/	/
额定脉冲电压(KV)/Rate Impulse Voltage(KV)	8	/	/
螺丝扭矩/Torque Tightening(N· m/Lb.in)	M2.5, 0.4/3.54		
线径范围(硬线和软线)/Wire Range(rigid and flexible)(AWG/mm²)	26~12 / 0.2~2.5		
间距/Pitch(mm)/线数范围/Poles	5.1/N=01P		
剥线长度/Stripping length(mm)	8~9		
使用温度范围/Operating temperature(°C)	-40~+105		
符合RoHS环保要求/Conform to RoHS	Yes		

ITEM	NAME OF PART	MATERIAL	NOTES
5	Grounding	Copper alloy	Zn Plated
4	Cage	Steel	M2.5/Zn Plated
3	Current Carrier	Copper	Zn Plated
2	Screw	Steel	M2.5/Zn Plated
1	Housing	PA66	UL94V-0

REV	ECN	DESCRIPTION	DRFT	DATE
00	/	Add explosion-proof certification lettering	邓梁	2024.08.15

DEGSON

APPD:	李根劳	2024.08.15
CHKD:	马恩开	2024.08.15
DRFT:	邓梁	2024.08.15

A4 mm (inch)

MATERIAL: / SURFACE/COLOR: /

MAT NO./REV: / / / MAT STATUS: 批量

NAME: DC2.5-PE-01P-1C-00Z(H)

DRAWING NO.	TYPE	DRAWING STATUS	SCALE	SHEET
200118733	CUSTOMER DRAWING	/	2:1	1/1

Transfer or duplication of this document as well as the utilization or communication of its contents are prohibited unless explicit authorization is granted. Violations will be liable for compensation. All rights reserved for patent, utility model or designs registrations. 除非给予明确授权，否则禁止转让、复制、利用、交流本文件的内容。侵犯者将负赔偿责任。本公司保留对涉及发明、实用新型和外观专利的所有权利。