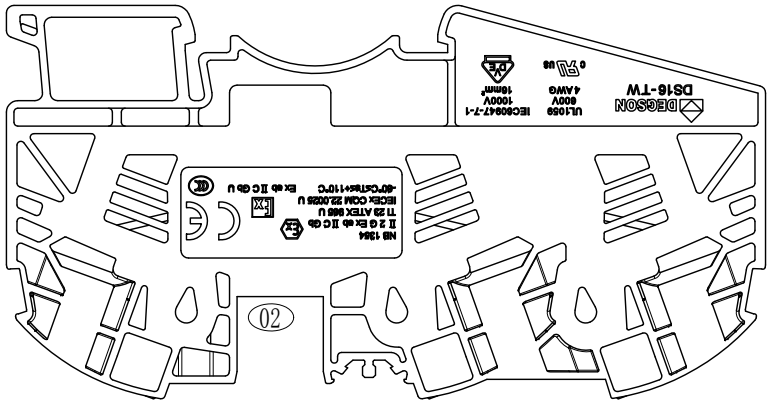



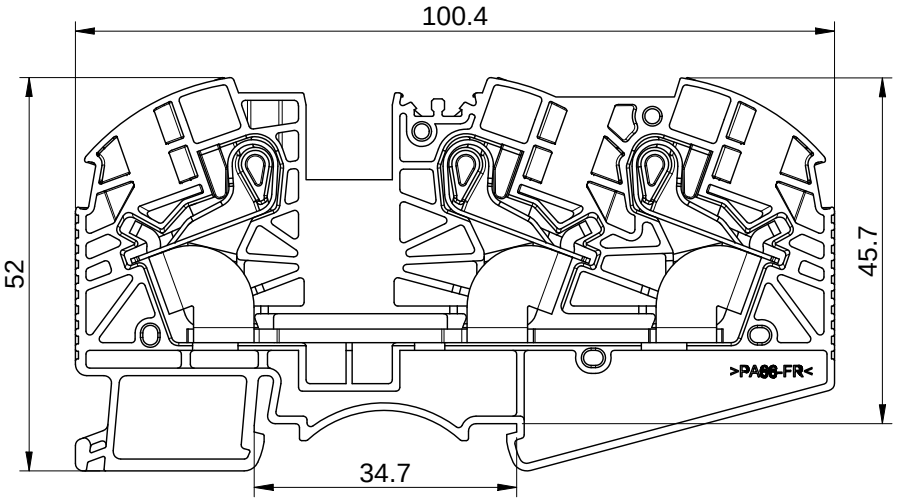

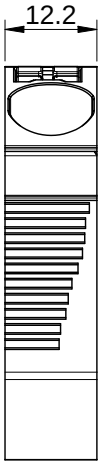

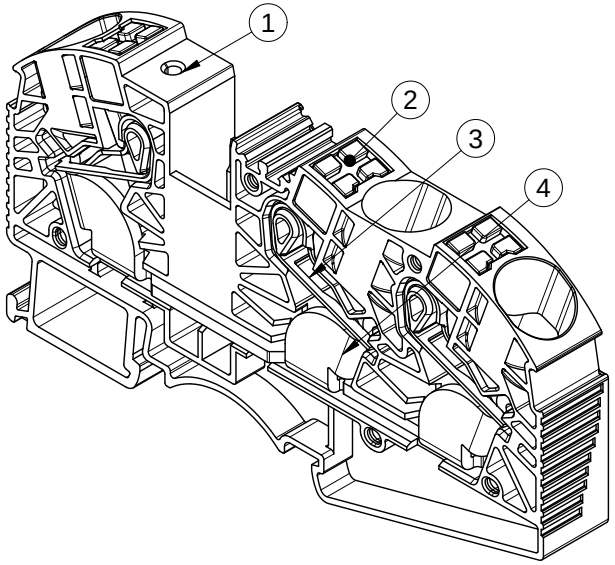

未注公差/General tolerances(mm)

0 ~ 3	>3 ~ 6	>6 ~ 10	>10 ~ 18	>18 ~ 30	>30 ~ 50	>50 ~ 80	>80 ~ 120	>120 ~ 180	>180 ~ 250	>250 ~ 315	>315 ~ 400	>400 ~ 500	>500
±0.12	±0.18	±0.22	±0.26	±0.31	±0.37	±0.57	±0.80	±0.93	±1.05	±1.15	±1.60	±2.20	±2.50

0.1/10

±2°

	B	C	D
UL 标准/UL Standard:			
额定电压/电流/Rated Voltage(V)/Current(A)	600V/85	/	/
IEC 标准/IEC Standard:			
过压类别/Overvoltage Category/污染等级/Pollution Degree	Ⅲ/3		
额定电压/电流/Rated Voltage(V)/Current(A)	1000/76		
额定脉冲电压(KV)/Rate Impulse Voltage(KV)	8		
线径范围(硬线和软线)/Wire Range(rigid and flexible)(AWG/mm²)	20~4 / 0.5~16,25(Sol)		
间距/Pitch(mm)/线数范围/Poles	12.2/01P		
剥线长度/Stripping length(mm)	18		
使用温度范围/Operating temperature(°C)	-40~+105		
符合 RoHS 环保要求/Conform to RoHS	Yes		

ITEM	NAME OF PART	MATERIAL	NOTES
4	Current carrier	Copper	Sn Plated
3	Spring	Stainless steel	/
2	Button	PA66+GF%	UL94V-0
1	Housing	PA66	UL94V-0

REV	ECN	DESCRIPTION	DRFT	DATE
02	/	刻字更新	岑乔枫	2024.06.19

DEGSON

APPD:	李根劳	2024.07.03
CHKD:	马恩开	2024.07.03
DRFT:	岑乔枫	2024.06.19

A4 mm (inch)

MATERIAL: SURFACE:

MAT NO./REV: 11040000193-1 / 01.03 MAT STATUS: 批量

NAME

DS16-TW-01P-1Y-00Z(H)

DRAWING NO.	TYPE	DRAWING STATUS	SCALE	SHEET
200007077	CUSTOMER DRAWING	已发布	1:1	1/1

Transfer or duplication of this document as well as the utilization or communication of its contents are prohibited unless explicit authorization is granted. Violations will be liable for compensation. All rights reserved for patent, utility model or designs registrations. 非给予明确授权，否则禁止转让、复制、利用、交流本文件的内容，侵犯者将负赔偿责任。本公司保留对涉及发明、实用新型和外观专利的所有权利。