Transfer or duplication of this document as well as the utilization or communication of its contents are prohibited unless explicit authorization is granted. Violations will be liable for compensation. All rights reserved for patent, utility model or designs registrations. 除非经予明确授权，否则禁止转让、复制、利用、交流本文件的内容，侵犯者将为赔偿责任。本公司保留对涉及说明、实用新型和外观专利的所有权利。

未注公差/General tolerances(mm)														0.1/10
0 ~ 3	>3 ~ 6	>6 ~ 10	>10 ~ 18	>18 ~ 30	>30 ~ 50	>50 ~ 80	>80 ~ 120	>120 ~ 180	>180 ~ 250	>250 ~ 315	>315 ~ 400	>400 ~ 500	>500	±2°
±0.12	±0.18	±0.22	±0.26	±0.31	±0.37	±0.57	±0.80	±0.93	±1.05	±1.15	±1.60	±2.20	±2.50	

线数范围/Poles	01P
阻燃等级/Flame closs	UL94V-0
使用温度范围/Operating temperature(°C)	-40~+105
符合RoHS环保要求/Conform to RoHS	Yes

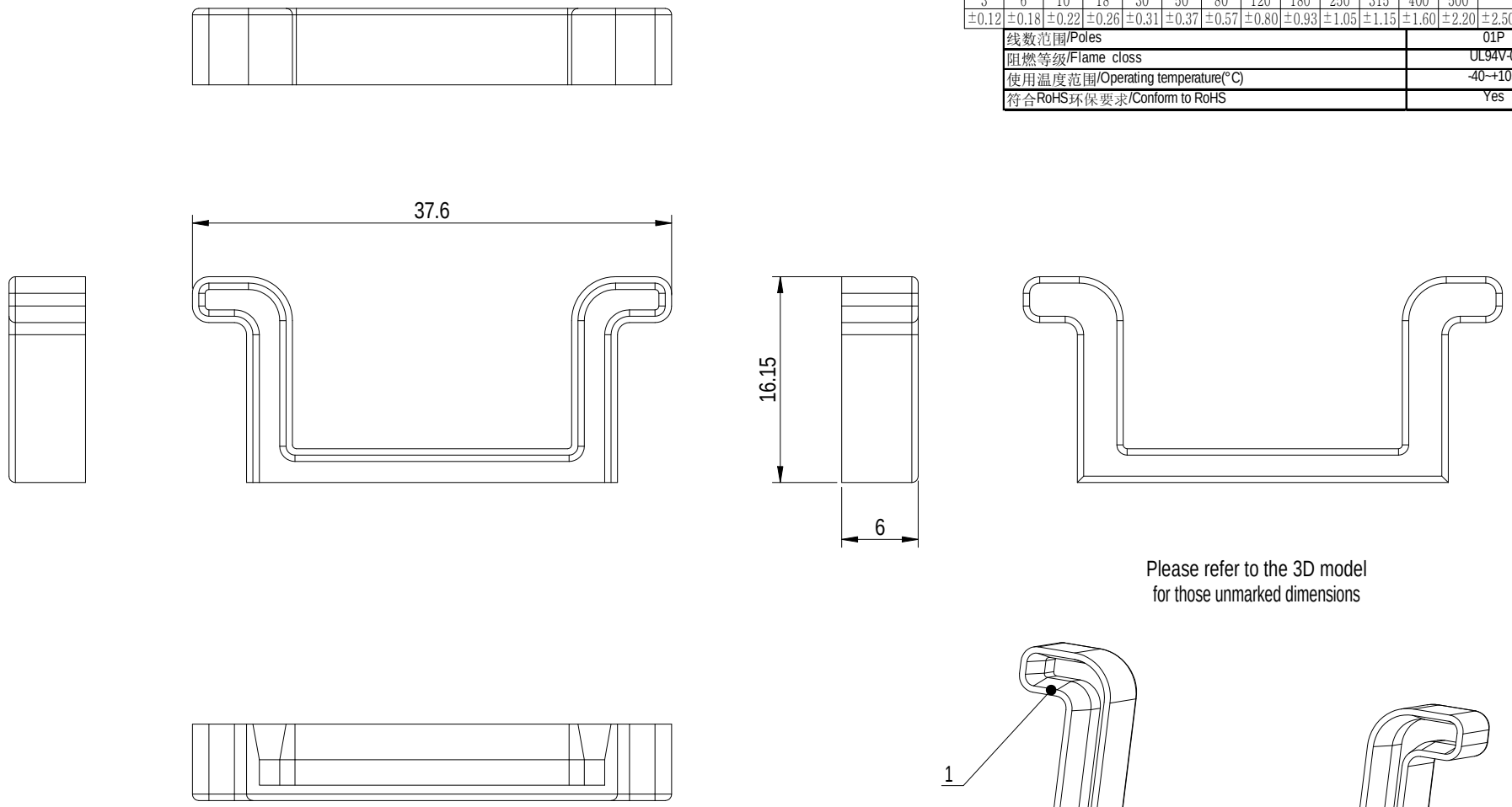

Please refer to the 3D model
for those unmarked dimensions

ITEM	NAME OF PART	MATERIAL	NOTES
1	Housing	PA66	UL94V-0

DEGSON

APPD: 李根劳	2022.03.23	
CHKD: 马恩开	2022.03.23	
DRFT: 郑启国	2022.03.23	A4

MATERIAL: PA66 | SURFACE/COLOR:

MAT NO./REV: 11060000471-1 / 02 | MAT STATUS: 批量

NAME: NS35/15-CAP-01P-11-00Z(H)

DRAWING NO.	TYPE	DRAWING STATUS	SCALE	SHEET
200060126	CUSTOMER DRAWING	已发布	2:1	1/1

REV	ECN	DESCRIPTION	DRFT	DATE
00		Initial release	郑启国	2022.03.23