PN
Standard Duty

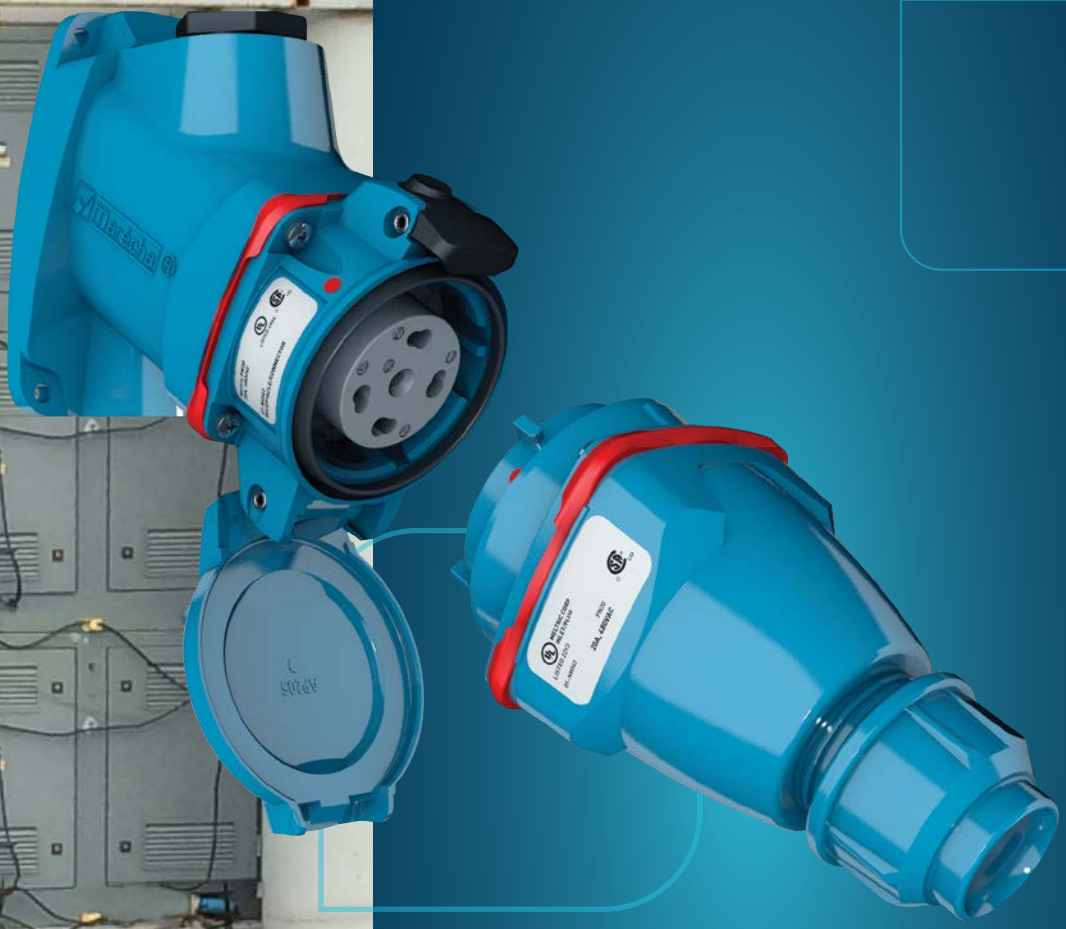

Main Advantages

- Compact yet durable device
- Spring-loaded, silver-nickel contacts
- Spring-assisted elliptical deforming ring at terminals are unaffected by vibrations and thermal cycling

- Features and Ratings p. 106
- PN20 p. 107
- Spare Parts p. 109
- Dimensions p. 111

SCAN ME »

PRODUCT FEATURES

Casing

Metal or Fiberglass reinforced thermoplastic polyamide material offers great resistance to impact, corrosion and harsh environmental conditions..

Spring-Loaded Butt-Style Contacts

Ensures optimal contact force and superior electrical performance over thousands of operations.

Spring-Assisted Screw Terminals

Patented design ensures "Tighten and Forget" confidence. (not shown)

Lid

Provides additional protection from harsh environments.

Silver-Nickel Contact Material

Solid, silver-nickel contact surfaces provide superior conductivity, durability and corrosion resistance.

General Ratings

Amperage	20 A
Voltage	600 VAC Max
Frequency	60-400 Hz
Environmental	4X/IP66/IP67
Temperature	Min -40°F/Max 140°F (465° PNHT pg. 113)

Current Interruption Listings

Model	Current Interruption Capabilities
PN20	For current interrupting

Highlighted Feature

PN Contact

PN devices feature silver-nickel, spring-loaded, butt-style contacts for superior durability and electrical performance.

Listings

Category	UL	CSA	IEC	NOM
Plugs and Receptacles	UL 1682	C22.2 No. 182.1	60309-1	NOM-003-SCFI-2014

Operating Instructions

To break the circuit and remove the plug, press the pawl, apply inward force and rotate the plug clockwise.

The plug can be safely withdrawn from the receptacle. The plug contacts remain shrouded until after the circuit is broken.

To reconnect, align the red dots on the plug and receptacle bodies, insert plug into the receptacle, apply insertion force and rotate the plug 20° counterclockwise.

PN20 Compact - 20 A

UL/CSA Ratings

- **Max Amperage & Voltage**
  20 A, 600 VAC
- **Current Interruption Capability**
  20 A Current Interrupting (up to 480 VAC)
  15 A Current Interrupting (600 VAC)
- **Environmental Ratings**
  Type 4X/IP66/IP67
- **Temperature Range**
  Min -40°F/Max 140°F
  See pg 260 for temperatures outside of this range.
- **Wiring Capacity**
  Based on THHN wire sizes.
  Min 14 AWG Max 8 AWG
- **Certifications**
  UL 1682, CSA C22.2 NO. 182.1, NOM

Receptacle
female

Inlet
male

! Remember to add installation accessories to your order

North American UL/CSA Configurations

NOTE: Poly devices should not be inter-mated with metal devices

VOLTAGE	POLARITY	PART # POLY	PART # METAL	PART # POLY	PART # METAL
120 V	1P+N+G	01-N4165	09-N4165	01-N8165	09-N8165
120 208 V	3P+N+G	01-N4167	09-N4167	01-N8167	09-N8167
125 V	1P+N+G	01-N4075	09-N4075	01-N8075	09-N8075
125 250 V	2P+N+G	01-N4076	09-N4076	01-N8076	09-N8076
208 V	2P+G	01-N4162	09-N4162	01-N8162	09-N8162
208 V	3P+G	01-N4163	09-N4163	01-N8163	09-N8163
250 V	2P+G	01-N4072	09-N4072	01-N8072	09-N8072
250 V	3P+G	01-N4073	09-N4073	01-N8073	09-N8073
277 V	1P+N+G	01-N4045	09-N4045	01-N8045	09-N8045
277 480 V	3P+N+G	01-N4047	09-N4047	01-N8047	09-N8047
347 600 V	3P+N+G	01-N4147	09-N4147	01-N8147	09-N8147
480 V	2P+G	01-N4042	09-N4042	01-N8042	09-N8042
480 V	3P+G	01-N4043	09-N4043	01-N8043	09-N8043
600 V	2P+G	01-N4142	09-N4142	01-N8142	09-N8142
600 V	3P+G	01-N4143	09-N4143	01-N8143	09-N8143

Notes: 600V devices are rated for current interrupting up to 15 A only.

For international configurations and ratings (IEC, CE) visit meltric.com/international-catalog or contact Customer Service at 800-433-7642.

Main Options

Reverse Interiors

Flush Mount
(replaces female casing)

Locking Pawl

! See pages 237-246 for detailed information on these options

RECEPTACLE OPTIONS	SUFFIX #	INLET OPTIONS	SUFFIX #
Reverse Interiors	**Recept # -001**	Reverse Interiors	**Inlet # -001**
With Flush Mount (poly only)	**Recept # -142+**		
Locking Pawl	**Recept # -824-300**		
Self-Returning Lid (Manual Close)	**Recept # -NC**		

Notes: + no environmental rating

Order Example: 480 V PN20 + reverse interiors

Receptacle: PN20 Receptacle 3P+G=01-N4043-***001***
Example shows a receptacle casing with male contacts.

Handle Option Guide pgs 243-244

INSTALLATION ACCESSORIES – SIZE 1

When properly installed, all accessories meet or exceed the environmental ratings of the devices they are mounted to; unless otherwise noted.

HANDLES

HANDLE WITH NPT	PART # POLY	PART # METAL
1/2"	511P0N05	791P0N05L
3/4"	511P0N07	791P0N07L
1"	511P0N10	791P0N10L

For available cord grips, see pg 231.

POLY HANDLE WITH CORD GRIP	CABLE RANGE	PART #
	.350-.520"	711P0BP6
	.520-.680"	711P0CP5
	.680-.980"	711P0DP4

METAL HANDLE WITH CORD GRIP		
	.438-.500"	791P0BS3L
	.500-.562"	791P0BS4L
	.562-.625"	791P0CS1L
	.625-.750"	791P0CS4L
	.750-.875"	791P0DS1L
	.875-1.000"	791P0DS3L

POLY 90° HANDLE WITH NPT		
1/2"		751P9N05
3/4"		751P9N07
1"		751P9N10

POLY HANDLE		
	.350-.700"	511P0D18

POLY ANGLED HANDLE		
	.354-.708"	511P6D18

ANGLES

POLY ANGLE		
MB Box 30°	511M3	
70°	511M7	Panel mounting only.

METAL ANGLE		
0°	591M0	
FS/FD Box 30°	791M3FS	Base measures approximately 4.2" x 2.7". Due to the variation in sizes of FS boxes, please verify that your FS box matches our dimensions, if not call Customer Service for other solutions.
45°	591M4	

BOXES

POLY CONDUIT ENTRY WITH NPT		PART #
* 7.0 in³ 30°	1/2"	511B3N05
30°	3/4"	511B3N07

POLY WALL BOX WITH NPT		
0°	1/2"	511B0N05
* 3.4 in³ 0°	3/4"	511B0N07

METAL WALL BOX WITH NPT		
0°	1/2"	591B0N05
* 3.8 in³ 0°	3/4"	591B0N07

POLY WALL BOX WITH ANGLE		
70°		511C7000
* 82.0 in³	Ground Bar	51AA089

70° poly boxes are not drilled.

METAL BOX WITH NPT		
0°	1/2"	7T1F0N05
0°	3/4"	7T1F0N07
0°	1"	7T1F0N10
0°	1 1/4"	7T1F0N12

POLY ANGLE WITH METAL BOX WITH NPT		
30°	1/2"	711C3N05
30°	3/4"	711C3N07
30°	1"	711C3N10
* 30.0 in³ 30°	1 1/4"	711C3N12

METAL ANGLE WITH METAL BOX WITH NPT		
45°	1/2"	791C4N05
45°	3/4"	791C4N07
45°	1"	791C4N10
* 27.0 in³ 45°	1 1/4"	791C4N12

NPT on top or bottom (if rotated). For other configurations, contact Customer Service.

MISCELLANEOUS ACCESSORIES

PROTECTIVE INLET/PLUG CAP	
01-NA426	For Inlets/Plugs Only.

FLUSH MOUNT
01-2A142

PN Spare Parts

Male Configuration

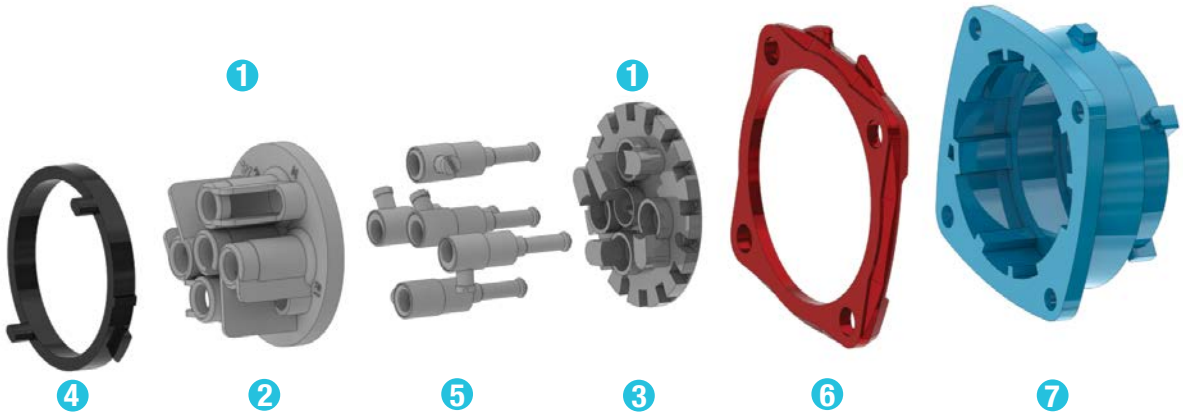

		PN20 POLY	PN20 METAL	PNHT HT METAL
1	Plug Insulator (Top & Bottom)	01-NA010	09-NA010	09-2A010-185
2	Insulator Bottom	01-NA010-B	09-NA010-B	09-2A010-185-B
3	Insulator Top	01-NA010-T	09-NA010-T	09-2A010-185-T
4	Locking Ring	01-NA583	09-NA583	09-2A583-185
5	Plug Contact	01-NA011	09-NA011	09-2A011-185
5	Plug Ground Contact	01-NA019	09-NA019	09-2A019-185
6	Color-Coded Voltage Gasket	01-NAJ26	09-NAJ26	-
		01-NAC26	09-NAC26	-
		01-NAB26	09-NAB26	-
		01-NAR26	09-NAR26	-
		01-NAN26	09-NAN26	
7	Plug Casing	01-NA014	09-NA014	09-2A014-185

Please provide full part number for accurate part alignment

Part numbers in catalog are for current revisions, others may be available upon request.

For replacement parts contact Customer Service at 800-433-7642.

Female Configuration

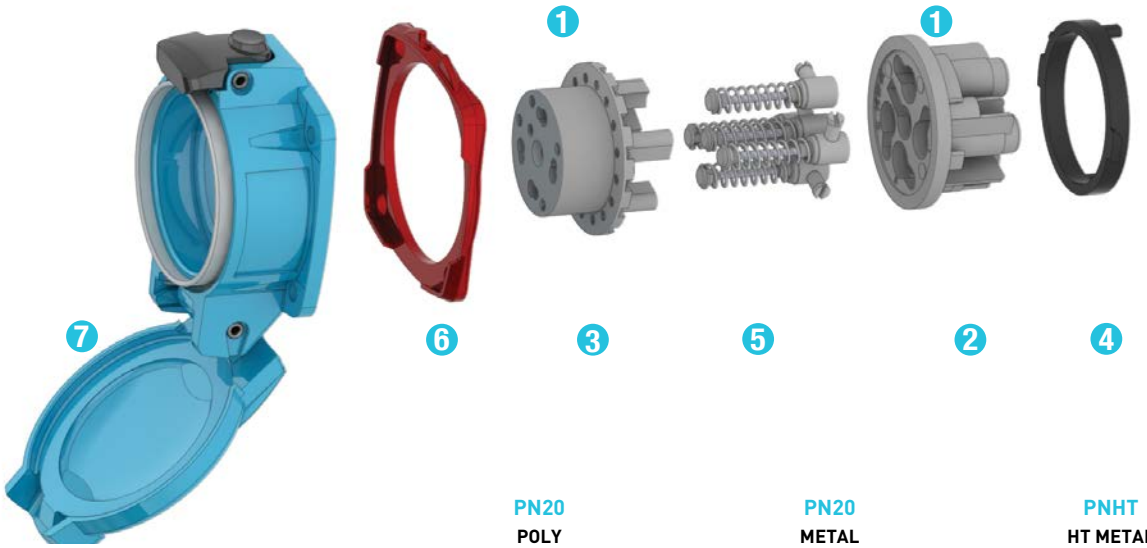

		PN20 POLY	PN20 METAL	PNHT HT METAL
1	Receptacle Insulator (Top & Bottom)	01-NA020	09-NA020	09-2A020-185
2	Insulator Bottom	01-NA020-B	09-NA020-B	09-2A020-185-B
3	Insulator Top	01-NA020-T	09-NA020-T	09-2A020-185-T
4	Locking Ring	01-NA583	09-NA583	09-2A583-185
5	Receptacle Contact	01-NA021	09-NA021	09-2A021-185
5	Receptacle Ground Contact	01-NA029	09-NA029	09-2A029-185
6	Color-Coded Voltage Gasket	01-NAJ26	09-NAJ26	-
		01-NAC26	09-NAC26	-
		01-NAB26	09-NAB26	-
		01-NAR26	09-NAR26	-
		01-NAN26	09-NAN26	
7	Receptacle Casing (as shown)	01-NA024	09-NA024	09-2A024-185

Please provide full part number for accurate part alignment

Part numbers in catalog are for current revisions, others may be available upon request.

For replacement parts contact Customer Service at 800-433-7642.

PN DIMENSIONS – Provided in Inches

SCAN ME >>

Dimensions are for reference only and may change depending on accessories used. For precise dimensions contact MELTRIC Engineering.

Plug

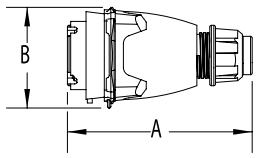

Inlet

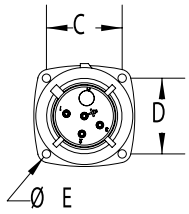

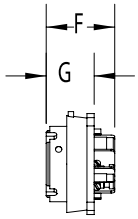

Plug Angled Handle

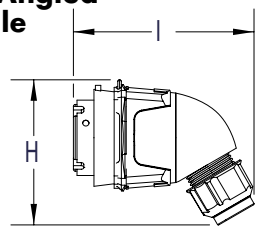

PRODUCT	A	B	C	D	E	F	G	H	I
PN	4.33	2.4	1.65	1.65	0.18	1.5	1.14	3.9	3.17

Connector

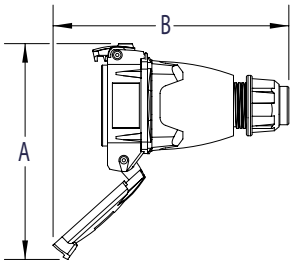

Receptacle

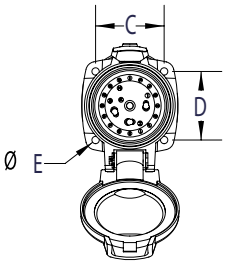

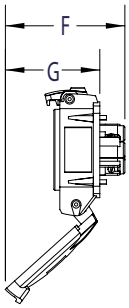

Connector Angled Handle

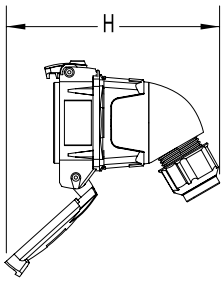

PRODUCT	A	B	C	D	E	F	G	H
PN	5.51	5.69	1.65	1.65	0.18	1.93	1.38	4.17

Box/30° Angle/ Receptacle/Plug

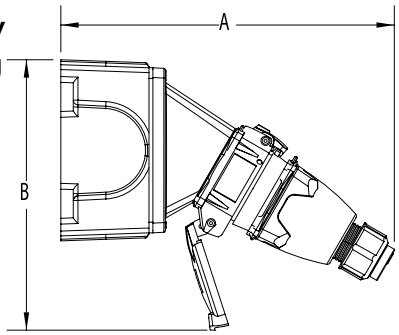

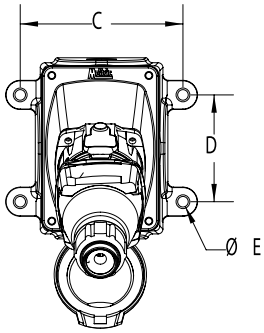

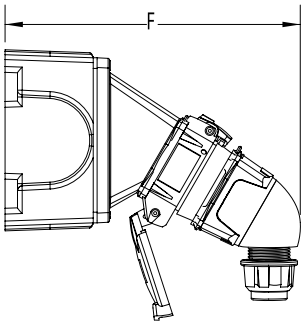

PRODUCT	A	B	C	D	E	F
PN	8.59	6.96	4.19	2.75	0.27	7.6

30° Angle/Receptacle/Plug

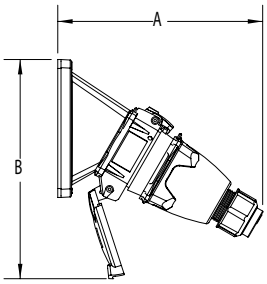

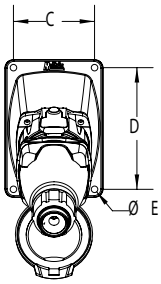

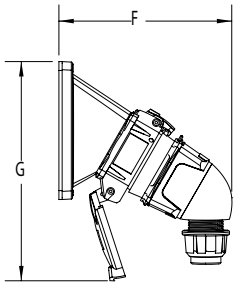

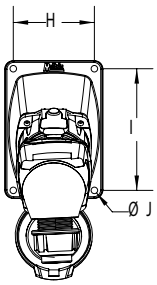

PRODUCT	A	B	C	D	øE	F	G	H	I	J
PN	6.32	6.76	2.5	3.75	0.2	5.33	6.76	2.5	3.75	0.2

70° Wall Box/Receptacle

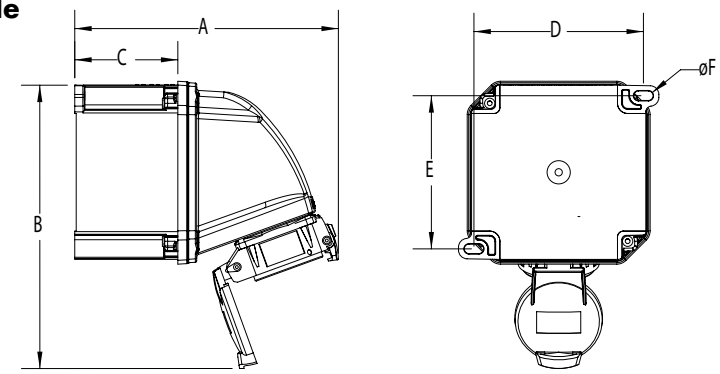

PRODUCT	A	B	C	D	E	F
PN	7.13	7.63	2.80	4.60	4.15	0.26

Straight Wall Box/Receptacle/Plug

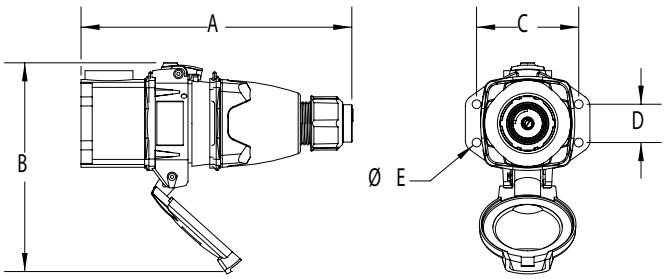

Straight Wall Box/Receptacle/ Plug/Angled Handle

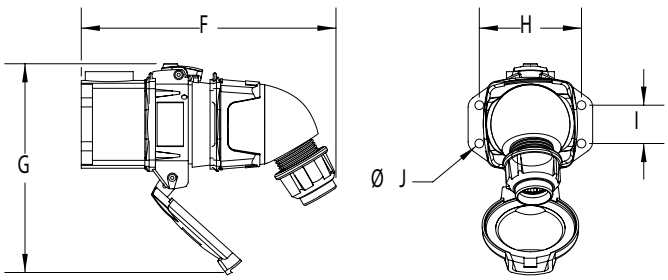

PRODUCT	A	B	C	D	øE	F	G	H	I	J
PN	6.68	5.15	2.52	0.95	0.22	6.28	5.15	2.52	0.95	0.22

Connector/Plug

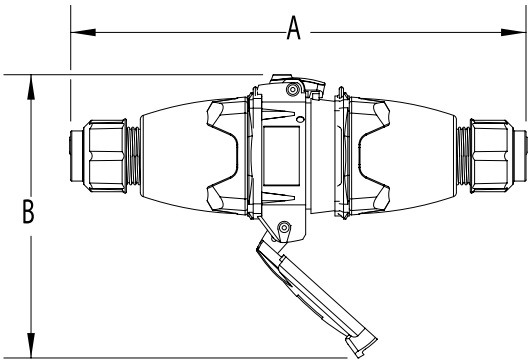

PRODUCT	A	B
PN	8.37	5.21