TECHTOP electric motors	**Model Number**	**BL1-AL-TF-63B35-4-B-C-.25-115|230-60**
	MFG PN	**TL632-4**
	List Price	**--**

All data shown at HIGH voltage setting — Format: STD 1 Phase

Electrical Data		**General Data**	
Rated Motor Output Power	0.25 HP	Frame Size	63
Rated Motor Speed	1735 r/min	Enclosure	TEFC
Rated Motor Voltage (1 Phase)	115|230-60 Volts - HZ	Approximate Weight	13.2
Rated Motor Current	2.62/1.31 Amps	NEMA Design	--
Service Factor	1.35	IP Rating	55
KVA Code	J	Insulation Class	F
Nominal Efficiency	68 %	Tropicalization	YES
Nominal Power Factor	0.88 cosθ	Duty	CONT
Full Load Torque Ft-Lb	0.98 Ft-Lb	Cable Entry	1
Temp Rise @ Full Load °C	--	Feet Removable	YES
Efficiency Level	IE3 - NEMA Premium	Double Drilled	NO
		Rated Ambient (°C)	40
		Rated Altitude (M)	1000
		Coating	7024 - Graphite Grey
		Start Capacitor (µF / V / Qty)	--
		Run Capacitor (µF / V / Qty)	--
		Centrifugal Switch Type	--

Load Data	**RPM**	**Trq %FL**	**Current Amps**
Locked Rotor	-	210	7.32
Breakdown	-	292	-
Pull Up	-	222	-
125% of FL	1716	-	1.501
75% of FL	1755.6	-	1.039
50% of FL	1770.4	-	0.8645
No Load	--	-	0.69
Hazardous Location	--		

Mechanical Data	
Bearing DE Side	6201-ZZ
Bearing NDE Side	6201-ZZ
Moment of Inertia	-- kg.m2
Noise Level	Per NEMA dB (A)

CT VFD Range	--

Loaded Torque Curves --

P1 = INPUT POWER (KW), S = Slip (% of Sync RPM), η = Efficiency (%), cosϕ = Power Factor

Certifications	UL	CSA	DOE
File Numbers	**323353**	**224693**	096A

Wiring Diagram **BL1-Wiring Diagram**

BL1 Wiring Diagram

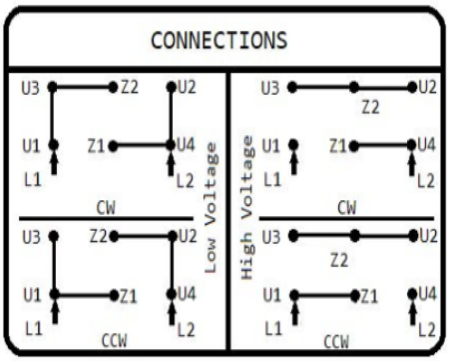

Model Number	BL1-AL-TF-63B35-4-B-C-.25-115|230-60
MFG PN	TL632-4
List Price	--
Base Frame	BL1-63B35-AL-TF

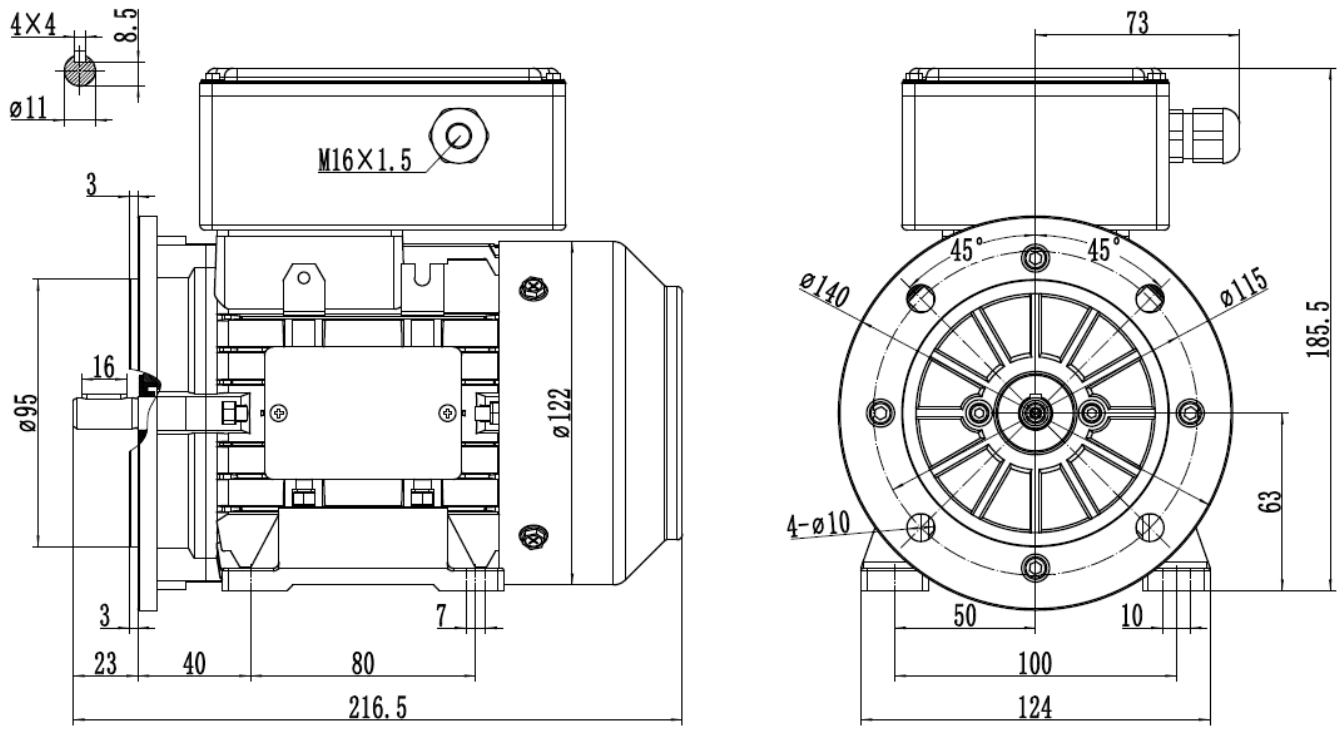

NingDe Top Motor Co,.LTD. 宁德特波电机有限公司				TL63B35	
				图 号:	
设 计		标准化		阶段标记	比 例
审 核		批 准			
工 艺		日 期	2023.01.12		1:1.3