TECHTOP electric motors	**Model Number**	**GR3-AL-TF-215JP-4-B-D-10-230|460-60**
	MFG PN	**TFC215T10U4B**
	List Price	**--**

All data shown at HIGH voltage setting — Format STD 3 Phase

Electrical Data		**General Data**	
Rated Motor Output Power	10 HP	Frame Size	215
Rated Motor Speed	1750 r/min	Enclosure	TEFC
Rated Motor Voltage (3 Phase)	230|460-60 Volts - HZ	Approximate Weight	176
Rated Motor Current	23.8/11.9 Amps	NEMA Design	A
Service Factor	1.25	IP Rating	55
KVA Code	J	Insulation Class	F
Nominal Efficiency	91.7 %	Tropicalization	YES
Nominal Power Factor	0.86 cosθ	Duty	Cont.
Full Load Torque Ft-Lb	38.3552 Ft-Lb	Cable Entry	1.25
Temp Rise @ Full Load °C	51.3	Feet Removable	YES
Efficiency Level	IE3 - NEMA Premium	Double Drilled	NO
		Rated Ambient (°C)	40
		Rated Altitude (M)	1000
		Coating	7024 - Graphite Grey
		Shaft Grounding	NO
		Brake Voltage (DC)	
		Brake Torque (N-M)	

Load Data	**RPM**	**Trq %FL**	**Current Amps**
Locked Rotor	-	212	93.82
Breakdown	-	269	-
Pull Up	-	101	-
125% of FL	1779	-	14.87
75% of FL	1767	-	8.94
50% of FL	1779	-	6.48
No Load	1795	-	3.67

Hazardous Location	**Class 1, Div 2, Grp A,B,C,D**

Mechanical Data	
Bearing DE Side	6308ZZ
Bearing NDE Side	6308ZZ
Moment of Inertia	kg.m2
Noise Level	Per NEMA dB (A)

CT VFD Range	--	**Loaded Torque Curves**	**--**

P1 = INPUT POWER (KW), S = Slip (% of Sync RPM), η = Efficiency (%), cosϕ = Power Factor

Certifications	UL	CSA	DOE
File Numbers	**323353**	**224693**	096A
Wiring Diagram	**3PH 9 Lead Dual Voltage**		

3 Phase - YY/Y - 9 Lead

4,1 Blue / 5,2 White / 6,3 Org / 7 Yl / 8 Blk / 9 RD

Cast Iron- 1,2,3 Top - 4,5,6,7,8,9 Bottom

Aluminum - 4,5,6,8,9 Top - 1,2,3,7 Bottom

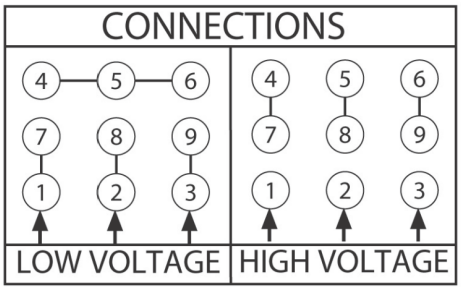

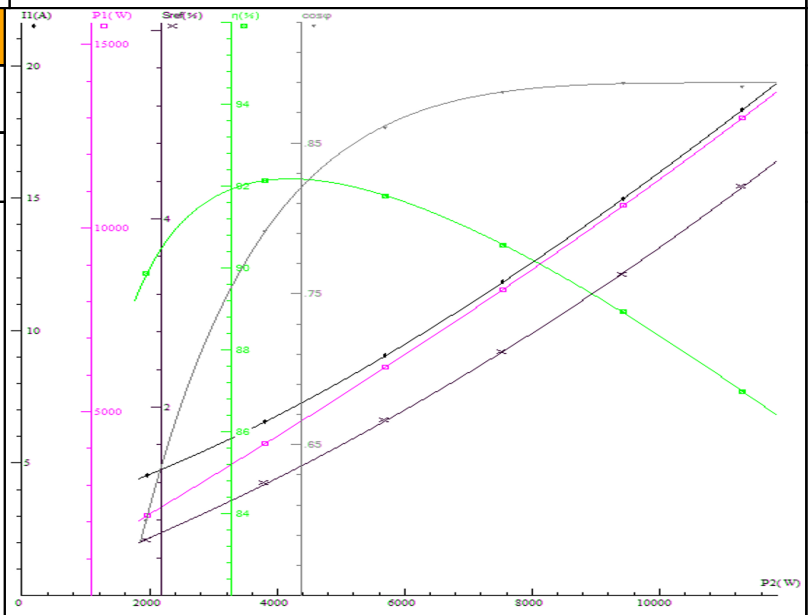

Techtop Industries -2815 Colonnades Court - Peachtree Corners, GA 30071 - Phone: (678) 436-5540

Model Number	GR3-AL-TF-215JP-4-B-D-10-230|460-60
MFG PN	TFC215T10U4B
List Price	--
Base Frame	GR-215JP-AL-TF

FRAME:	HP:	RPM:	PHASE:	VOLT:	ENCL:	FREQ:	FLA:	LRA:

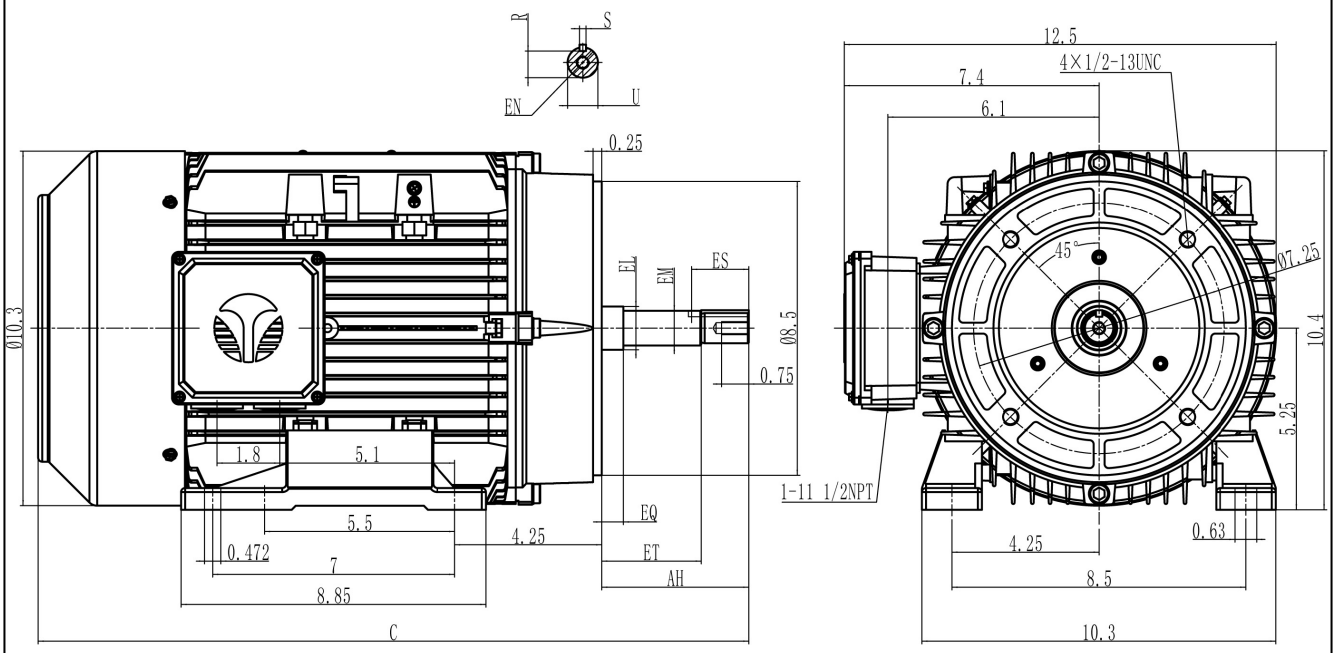

MODEL	AH	EQ	ET	C	EL	EM	ES	ES	U	R	S
210JM	4.25	0.625	2.875	20.6	1.25	1.0	3/8-16UNC	1.65	0.8745	0.771	0.1875×0.1875×1.375
210JP	8.125	2.375	5.875	24.5	1.75	1.375	1/2-13UNC	2.53	1.2495	1.112	0.25×0.25×2.41

MODEL: NEMA210JM-JP	SCALE: 1:2.5	DATE:	UNITS:		
REV.DESC:	VERSION:	REVISED:	BY:		
			WWW.TECHTOP.COM		