TECHTOP electric motors	**Model Number**	**RD1-RS-TF-184T-4-B-B-5-208-230-60**
	MFG PN	**SLF184T5Z4L**
	List Price	**--**

All data shown at HIGH voltage setting — Format: STD 1 Phase

Electrical Data		**General Data**	
Rated Motor Output Power	5 HP	Frame Size	184
Rated Motor Speed	1740 r/min	Enclosure	TEFC
Rated Motor Voltage (1 Phase)	208-230-60 Volts - HZ	Approximate Weight	114.62
Rated Motor Current	21 Amps	NEMA Design	L
Service Factor	1.15	IP Rating	55
KVA Code	G	Insulation Class	F
Nominal Efficiency	0.82 %	Tropicalization	YES
Nominal Power Factor	0.93 cosθ	Duty	Cont.
Full Load Torque Ft-Lb	20.28 Ft-Lb	Cable Entry	1.25
Temp Rise @ Full Load °C	74.5	Feet Removable	YES
Efficiency Level	IE3 - NEMA Premium	Double Drilled	NO
		Rated Ambient (°C)	40
		Rated Altitude (M)	1000
		Coating	7024 - Graphite Grey
		Start Capacitor (µF / V / Qty)	350 uF / 330 V
		Run Capacitor (µF / V / Qty)	30uF / 450 V
		Centrifugal Switch Type	--
		Mechanical Data	
		Bearing DE Side	6306 2RZ
		Bearing NDE Side	6206 2RZ
		Moment of Inertia	-- kg.m2
		Noise Level	Per NEMA dB (A)

Load Data	**RPM**	**Trq %FL**	**Current Amps**
Locked Rotor	-	204	139
Breakdown	-	378	-
Pull Up	-	197	-
125% of FL	1718	-	26.15
75% of FL	1760	-	15.33
50% of FL	1774	-	11.11
No Load	--	-	5.26
Hazardous Location	--		

CT VFD Range	--	**Loaded Torque Curves**	**--**

P1 = INPUT POWER (KW), S = Slip (% of Sync RPM), η = Efficiency (%), cosϕ = Power Factor

Certifications	UL	CSA	DOE
File Numbers	**323353**	**224693**	096A
Wiring Diagram	**RD1-182-215-Frame-wiringDiagram**		

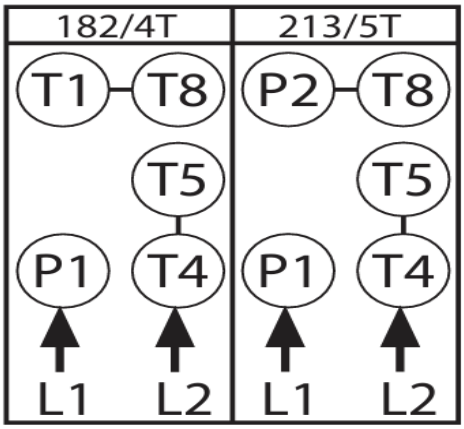

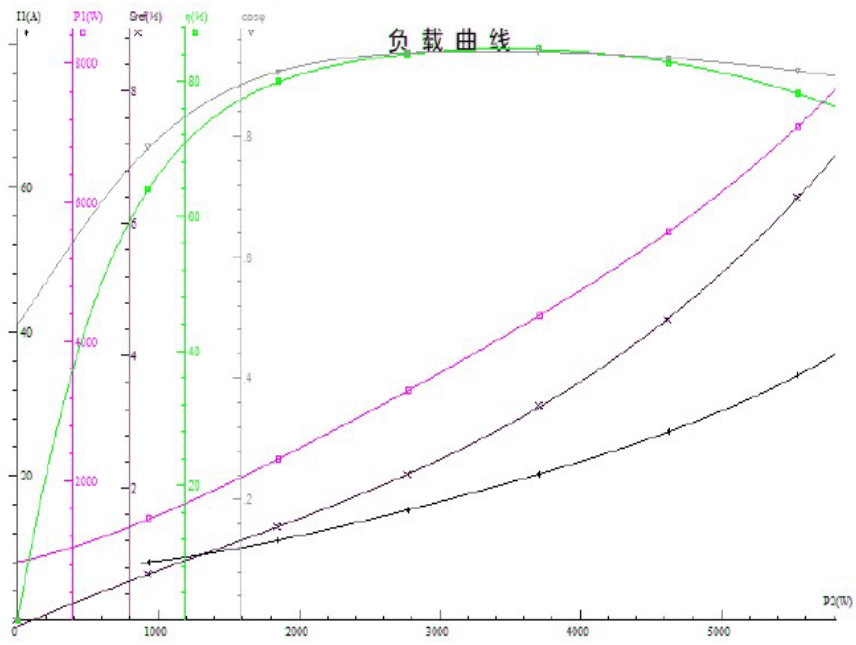

Model Number	RD1-RS-TF-184T-4-B-B-5-208-230-60
MFG PN	SLF184T5Z4L
List Price	--
Base Frame	RD-184T-RS-TF

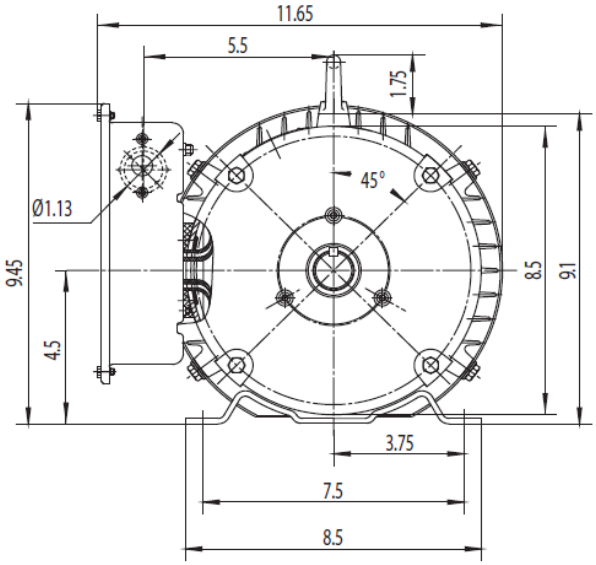

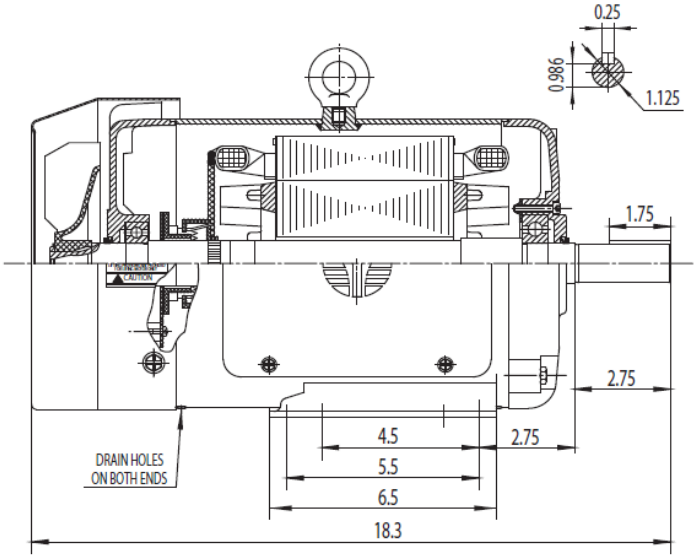

TECHTOP®		NEMA TEFC 184T	
Drawing Number:	RD1-RS-TF-184T	Issued Date:	6/22/15
Dimensions:	Inches		
Mounting:	Rigid	TEFC - Red Line NEMA High Torque Farm Duty Series	
Casing Material:	Rolled Steel		