TECHTOP electric motors		**Model Number**	**RD1-RS-TF-184TC-4-B-B-5-208-230-60**
		MFG PN	**SLF184T5Z4L**
		List Price	**--**
All data shown at HIGH voltage setting		Format	STD 1 Phase

Electrical Data				**General Data**	
Rated Motor Output Power	5 HP			Frame Size	184
Rated Motor Speed	1740 r/min			Enclosure	TEFC
Rated Motor Voltage (1 Phase)	208-230-60 Volts - HZ			Approximate Weight	115.7
Rated Motor Current	21 Amps			NEMA Design	L
Service Factor	1.15			IP Rating	55
KVA Code	G			Insulation Class	F
Nominal Efficiency	82 %			Tropicalization	YES
Nominal Power Factor	0.93 cosθ			Duty	Cont.
Full Load Torque Ft-Lb	20.28 Ft-Lb			Cable Entry	1.25
Temp Rise @ Full Load °C	74.5			Feet Removable	YES
Efficiency Level	IE3 - NEMA Premium			Double Drilled	NO
Load Data	**RPM**	**Trq %FL**	**Current Amps**	Rated Ambient (°C)	40
Locked Rotor	-	204	139	Rated Altitude (M)	1000
Breakdown	-	378	-	Coating	7024 - Graphite Grey
Pull Up	-	197	-	Start Capacitor (µF / V / Qty)	350 uF / 330 V
125% of FL	1718	-	26.15	Run Capacitor (µF / V / Qty)	30uF / 450 V
75% of FL	1760	-	15.33	Centrifugal Switch Type	--
50% of FL	1774	-	11.11	**Mechanical Data**	
No Load	--	-	5.26	Bearing DE Side	6306 2RZ
Hazardous Location	--			Bearing NDE Side	6206 2RZ
				Moment of Inertia	-- kg.m2
				Noise Level	Per NEMA dB (A)

CT VFD Range	--	**Loaded Torque Curves**	**--**
		P1 = INPUT POWER (KW), S = Slip (% of Sync RPM), η = Efficiency (%), cosϕ = Power Factor	

Certifications	UL	CSA	DOE
File Numbers	**323353**	**224693**	096A
Wiring Diagram	**RD1-182-215-Frame-wiringDiagram**		

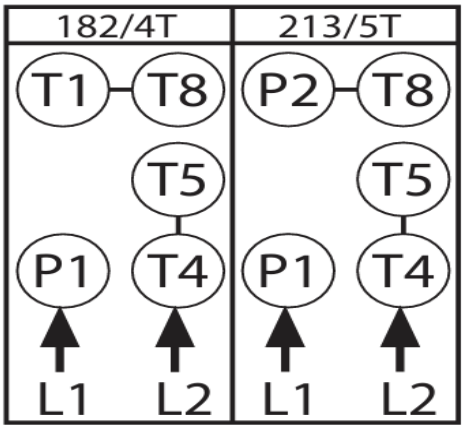

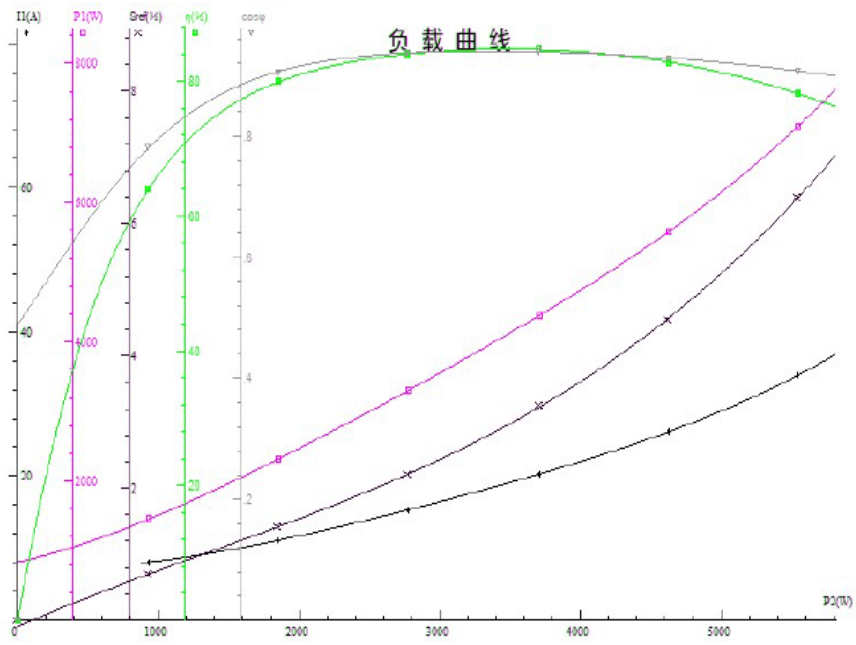

Model Number	RD1-RS-TF-184TC-4-B-B-5-208-230-60
MFG PN	SLF184T5Z4L
List Price	--
Base Frame	RD-184TC-RS-TF

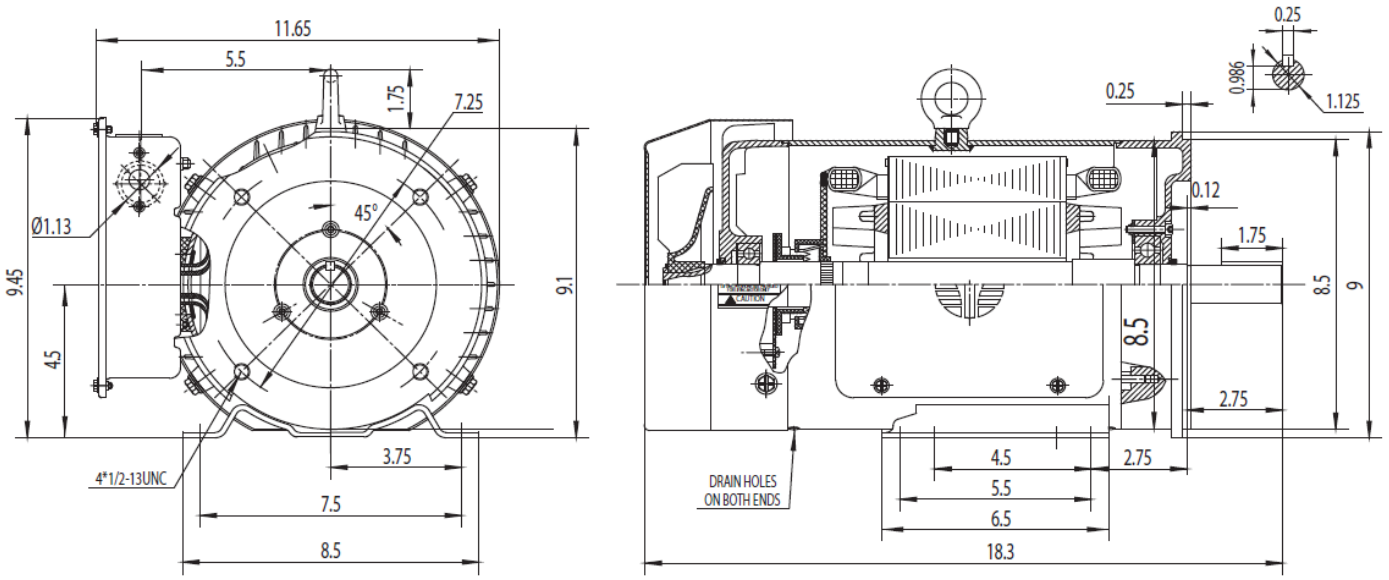

TECHTOP®		NEMA TEFC 184TC	
Drawing Number:	RD1-RS-TF-184TC	Issued Date:	6/22/15
Dimensions:	Inches		
Mounting:	Rigid/C-Flange	TEFC - Red Line NEMA High Torque Farm Duty Series	
Casing Material:	Rolled Steel		