TECHTOP electric motors		**Model Number**	**RD1-RS-TF-215T-4-B-B-10-208-230-60**
		MFG PN	**SLF215T10Z4L**
		List Price	**--**
All data shown at HIGH voltage setting		Format	STD 1 Phase

Electrical Data				**General Data**	
Rated Motor Output Power		10 HP		Frame Size	215
Rated Motor Speed		1740 r/min		Enclosure	TEFC
Rated Motor Voltage (1 Phase)		208-230-60 Volts - HZ		Approximate Weight	224.4
Rated Motor Current		41.8 Amps		NEMA Design	L
Service Factor		1.15		IP Rating	55
KVA Code		H		Insulation Class	F
Nominal Efficiency		0.83 %		Tropicalization	YES
Nominal Power Factor		0.94 cosθ		Duty	Cont.
Full Load Torque Ft-Lb		40.87 Ft-Lb		Cable Entry	1.25
Temp Rise @ Full Load °C		94.3		Feet Removable	YES
Efficiency Level		IE3 - NEMA Premium		Double Drilled	NO
Load Data	**RPM**	**Trq %FL**	**Current Amps**	Rated Ambient (°C)	40
Locked Rotor	-	240	284.9	Rated Altitude (M)	1000
Breakdown	-	393	-	Coating	7024 - Graphite Grey
Pull Up	-	201	-	Start Capacitor (µF / V / Qty)	500 uF / 350 V
125% of FL	1736	-	52.47	Run Capacitor (µF / V / Qty)	50uF / 450 V
75% of FL	1766	-	31.12	Centrifugal Switch Type	--
50% of FL	1778	-	22.33	**Mechanical Data**	
No Load	--	-	8.83	Bearing DE Side	6208 2RZ
Hazardous Location	--			Bearing NDE Side	6206 2RZ
				Moment of Inertia	-- kg.m2
				Noise Level	Per NEMA dB (A)

CT VFD Range	--	**Loaded Torque Curves**	**--**
		P1 = INPUT POWER (KW), S = Slip (% of Sync RPM), η = Efficiency (%), cosϕ = Power Factor	

Certifications	UL	CSA	DOE
File Numbers	**323353**	**224693**	096A
Wiring Diagram	**RD1-182-215-Frame-wiringDiagram**		

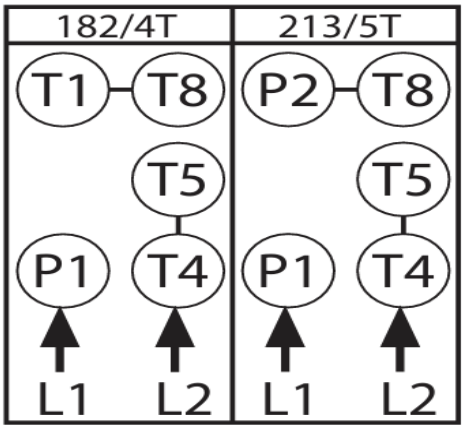

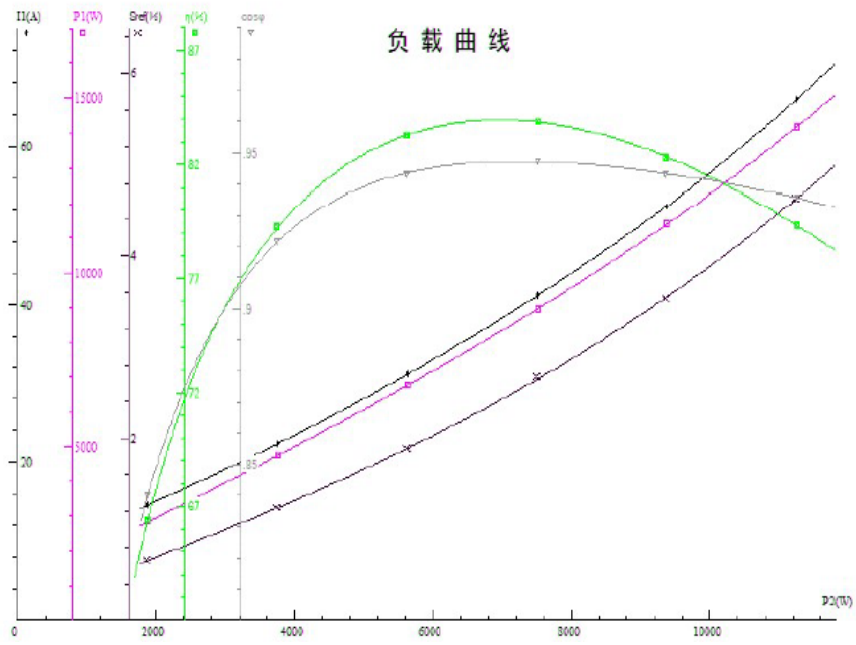

Model Number	RD1-RS-TF-215T-4-B-B-10-208-230-60
MFG PN	SLF215T10Z4L
List Price	--
Base Frame	RD-215T-RS-TF

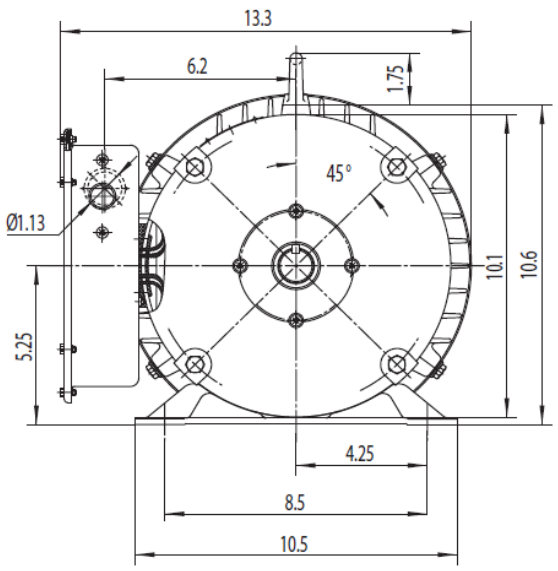

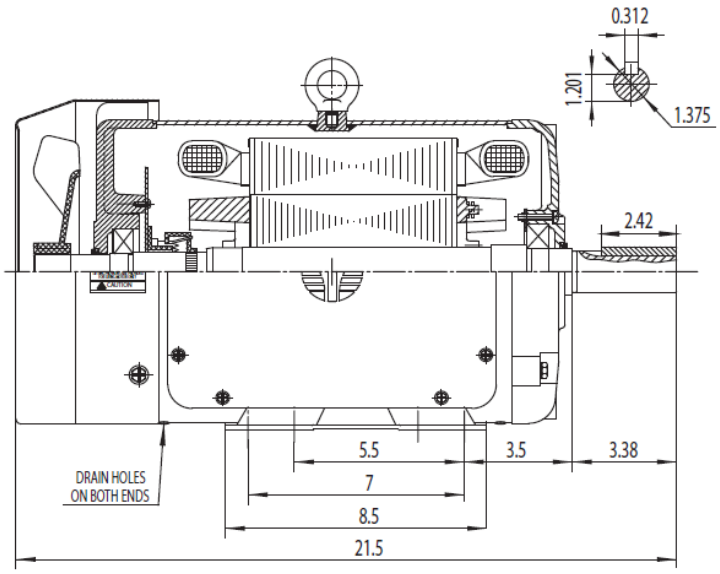

TECHTOP®		NEMA TEFC 215T	
Drawing Number:	RD1-RS-TF-215T	Issued Date:	6/22/15
Dimensions:	Inches		
Mounting:	Rigid	TEFC - Red Line NEMA High Torque Farm Duty Series	
Casing Material:	Rolled Steel		