TECHTOP electric motors	**Model Number**	**XP3-405T-6-75-230|460-60**
	MFG PN	**NEB 405T-6**
	List Price	**--**

All data shown at HIGH voltage setting — Format STD 3 Phase

Electrical Data				**General Data**	
Rated Motor Output Power		75 HP		Frame Size	405
Rated Motor Speed		1193 r/min		Enclosure	TEFC
Rated Motor Voltage (3 Phase)		230|460-60 Volts - HZ		Approximate Weight	1388.9
Rated Motor Current		183.5/91.7 Amps		NEMA Design	B
Service Factor		1.15		IP Rating	55
KVA Code		G		Insulation Class	F
Nominal Efficiency		94.5 %		Tropicalization	--
Nominal Power Factor		0.81 cosθ		Duty	CONT
Full Load Torque Ft-Lb		-- Ft-Lb		Cable Entry	--
Temp Rise @ Full Load °C		--		Feet Removable	--
Efficiency Level		IE3 - NEMA Premium		Double Drilled	--
Load Data	**RPM**	**Trq %FL**	**Current Amps**	Rated Ambient (°C)	50
Locked Rotor	-	--	--	Rated Altitude (M)	--
Breakdown	-	--	-	Coating	-- - --
Pull Up	-	--	-	Shaft Grounding	NO
125% of FL	--	-	--	Brake Voltage (DC)	--
75% of FL	--	-	--	Brake Torque (N-M)	--
50% of FL	--	-	--	**Mechanical Data**	
No Load	--	-	--	Bearing DE Side	6316/C3
Hazardous Location	**Class 1/2 Div1 Grp C,D/F,G**			Bearing NDE Side	6316/C3
				Moment of Inertia	-- kg.m2
				Noise Level	Per NEMA dB (A)

CT VFD Range	--	**Loaded Torque Curves**	**--**
		P1 = INPUT POWER (KW), S = Slip (% of Sync RPM), η = Efficiency (%), cosϕ = Power Factor	

Certifications	UL	CSA	DOE
File Numbers	--	--	--
Wiring Diagram	--		

File Unavailable
Please contact Techtop Engineering to request this data
numana@techtopind.com

TECHTOP electric motors	Model Number	XP3-405T-6-75-230|460-60
	MFG PN	NEB 405T-6
	List Price	--
	Base Frame	XP-405T-CI-TF

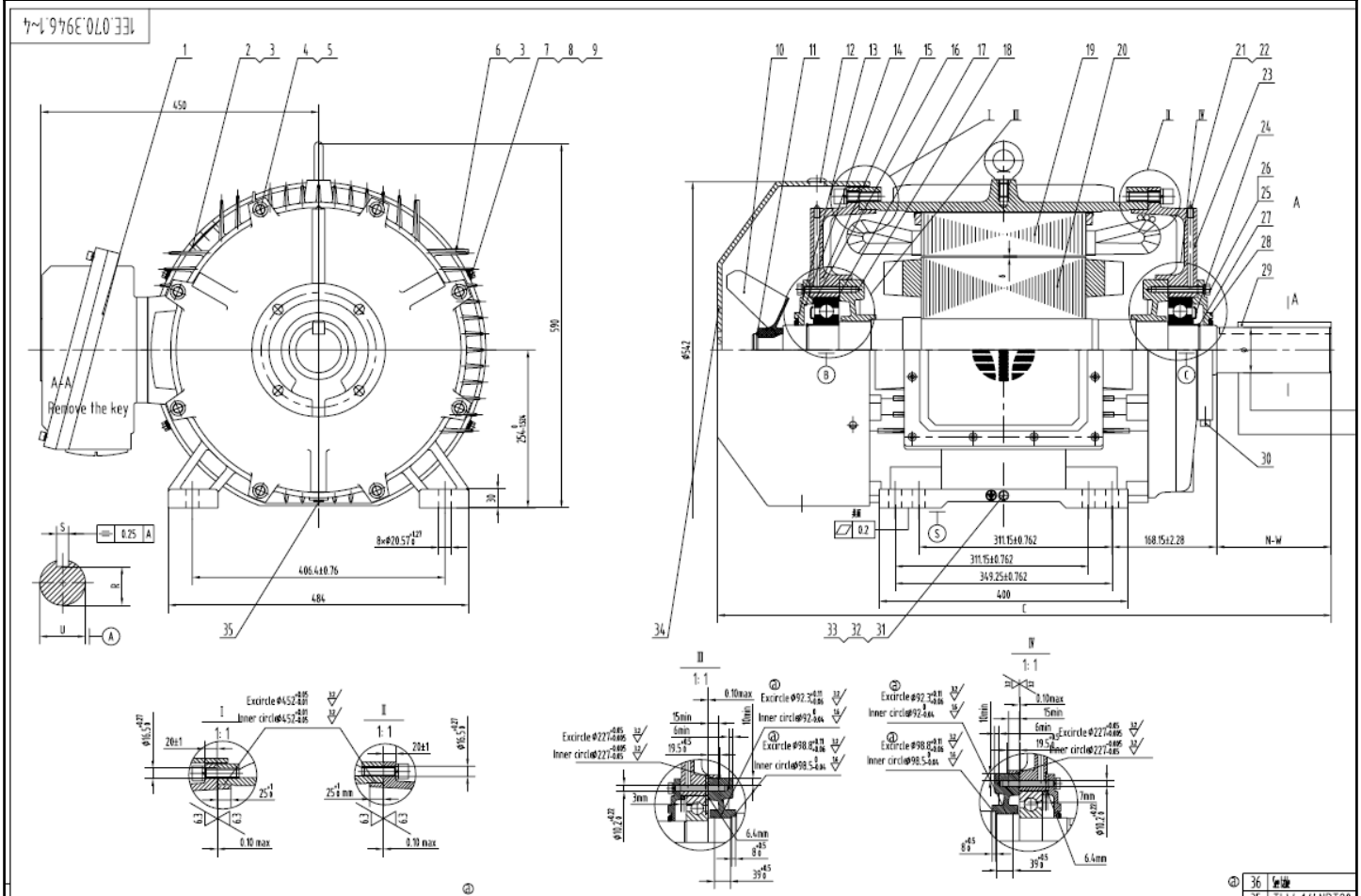

1EE.070.3946.4	8EE.435.311	5EE.671.7011.4	5EE.674.6306.4	8EE.970.329	0EE.300.17602.2	630	990	184.15±0.43	62.23	19.05	Φ73.025	0.8	NEB405T-6 75HP
1EE.070.3946.3	8EE.435.311	5EE.671.7011.3	5EE.674.6306.3	8EE.970.329	0EE.300.17602.1	610	990	184.15±0.43	62.23	19.05	Φ73.025	0.8	NEB404T-6 60HP
1EE.070.3946.2	8EE.435.309	5EE.671.7011.2	5EE.674.6306.2	8EE.970.329	0EE.300.17601	640	990	184.15±0.43	62.23	19.05	Φ73.025	0.95	NEB405T-4 100HP
1EE.070.3946.1	8EE.435.310	5EE.671.7011.1	5EE.674.6306.1	8EE.970.327.2	0EE.300.17600	625	915	107.95	46.86	12.7	Φ53.975	1.5	NEB405TS-2 100HP
Serial code	No.10	No.19	No.20	No.29	No.36	Weight	C	±0.43 N-W	R	S	U	δ	Remark

No.	Symbol
36	[illegible]
35	TLW-1/4NPT20
34	8EE.306.2082
33	GB/T 93
32	ASME B18.2.1
31	GB/T 97.1